USER'S MANUAL
Rev. 06/2014

MULTIDRIVE-3PH
THYRISTOR UNIT

00006

from 35A to 850A

CD Automation S.r.l.
Via Picasso 34/36 - 20025 – Legnano (MI) – ITALY
Tel +39 0331 577479 – Fax +39 0331 579479
E-Mail: info@cdautomation.com - WEB: www.cdautomation.com

SUMMARY

1 Important warnings for safety 5

2 Introduction 7

2.1 Advantages compared with analog thyristor unit 7
2.2 CD-KP 8
2.3 CD-EASY 8
2.4 Software Configurator 9

3 Quick Start 10

4 MULTIDRIVE Sizing 11

5 Identification and Order Code 12

5.1 Identification of the unit 12
5.2 Order Code 13

6 Installation 14

6.1 Environmental installation conditions 14
6.2 Dimensions and Weight 15
6.3 Fixing holes 16

7 Wiring instructions 17

7.1 Removing the cover 17
7.2 Wiring details 17
7.3 Power Terminals 19
7.4 Command Terminals 20
7.5 Diagram of control connection 21

8 Power output features 22

8.1 Derating curve 22
8.2 Cooling fans 22

9 Led status and Alarms 23

9.1 LED Status Table 23
9.2 Critical Alarms 24
9.3 Not Critical Alarm 24
9.4 Calibration Procedure 25

10 Control Panel 25

10.1 Scroll the parameters 26
10.2 Operator Menu 27

10.3 Hardware Menu 30
10.4 Setup Menu 35

11 Firing type 37

11.1 Single Cycle (SC) 37
11.2 Burst Firing (BF) 39
11.3 Phase Angle (PA) 41
11.4 Delay Triggering (DT) 43
11.5 Action of the Limit Current 45
11.6 Feed-back type 46

12 Connection description 47

12.1 Access to the Electronic boards 47
12.2 Supply the Electronic Board PWI30 48
12.3 External Feed-Back 48
12.4 Analog Inputs 49
12.5 Analog Outputs 51
12.6 Digital Input 53
12.7 Digital Output 54
12.8 PG Connector 57
12.9 RS485 Serial Port 58

Internal Fuse 59

12.10 Fuse Code 59

13 Maintenance 60

13.1 Fans 60
13.2 Maintenance 60
13.3 Repairing procedure 60
13.4 Warranty condition 60

1 Important warnings for safety

This chapter contains important information for the safety. The not observance of these instructions may result in serious personal injury or death and can cause serious damages to the Thyristor unit and to the components system included.
The installation should be performed by qualified persons.

The Thyristor unit are integral part of industrial equipments. When it is supply, the Thyristor unit is subject to dangerous tensions.

- Don't remove the protection Cover.
- Don't use these unit in aerospace applications and/ or nuclear.

The nominal current corresponds to use at temperature not superior to 45°C.

- The Thyristor unit must be mounted in vertical position and without obstruction above and below to allow a good flow ventilation.
- The hot air of one thyristor unit must not invest the unit positioned above.
- For side by side placed leave a space of 15mm between the unit.

A suitable device must ensure that the unit can be electrically isolated from the supply, this allows the qualified people to work in safety.

Protection (Protection, Protezione)
The unit have IP20 protection rating as defined by the specific international. Is necessary consider the place of installation.

Earth (Terre, Messa a terra)
For safety, the Thyristor unit with isolated heat-sink must be connected to earth.
Earth impedance should be correspondent to local earth regulation. Periodically the earth efficiency should be inspected.

Electronic supply (Alimentation électronique, Alimentazione elettronica)
The electronic circuit of the Thyristor unit must be supplied by dedicated voltage for all electronic circuits and not in parallel with coil contactors, solenoids and other.
It's recommended to use a shielded transformer.

Electric Shock Hazard (Risque de choque électrique, Rischi di scosse elettriche)
When the Thyristor unit is energized, after the power supply is shut off, wait least a minute for allow the discharge of the internal capacitors where there is a dangerous tension. Before working, make sure that:

- Only authorized personnel must perform maintenance, inspection, and replacement operations.
- The authorized personnel must read this manual before to have access to the unit.
- Unqualified People don't perform jobs on the same unit or in the immediate vicinities.

Important warnings (Attention, Avvertenze importanti)
During the operations with units under tension, local regulations regarding electrical installation should be rigidly observed:

- Respect the internal safety rules.
- Don't bend components to maintain insulation distances.
- Protect the units from high temperature humidity and vibrations.
- Don't touch components to prevent electrostatic discharges on them.
- Verify that the size is in line with real needs.
- To measure voltage current etc. on unit, remove rings and other jewels from fingers and hands.
- Authorized personnel that work on thyristor unit under power supply voltage must be on insulated board

This listing does not represent a complete enumeration of all necessary safety cautions.

Electromagnetic compatibility
(Compatibilità électromagnétique, Compatibilità elettromagnetica)
Our thyristor units have an excellent immunity to electromagnetic interferences if all suggestions contained in this manual are respected. In respect to a good Engineering practice, all inductive loads like solenoids contactor coils should have a filter in parallel.

Emissions (Emission, Emissioni)
All solid-state power controllers emit a certain amount of radio-frequency energy because of the fast switching of the power devices.
The CD Automation's Thyristor unit are in accord with the EMC norms, CE mark.
In most installations, near by electronic systems will experience no difficulty with interference. If very sensitive electronic measuring equipment or low-frequency radio receivers are to be used near the unit, some special precautions may be required. These may include the installation of a line supply filter and the use of screened (shielded) output cable to the load.

Note

Warning: This icon is present in all the operational procedures where the Improper operation may result in serious personal injury or death

Caution: This icon is present in all the operational procedures where the Improper operation can cause damage for the Thyristor unit.

CD Automation reserves the right to modify the own products and this manual without any advise.

2 Introduction

A thyristor unit is semiconductor device which acts as a switch formed by two thyristors in ant parallel. To switch on the alternating current the input signal will be on and the thyristor will switch off at first Zero Crossing voltage with no input signal.
The benefits of thyristor units compared with elettromechanical contactors are numerouses: no moving parts, no maintenance and capacity to switch very fast. Thyristors are the only solution to control transformers and special loads that change resistance with temperature and with age.

2.1 Advantages compared with analog thyristor unit

MULTIDRIVE is an universal Thyristor unit, designed to control resistive or inductive loads including three phase transformers. The electronic circuit is completely digital and is based on a powerful microprocessor with high performance that allow the use in different ways:

- Single cycle
- Burst Firing with soft start and current limit
- Delayed triggering
- Phase Angle with soft start and current limit

On same unit can be used different feed back that define the control mode:

- Voltage
- Current
- Power VxI
- External 0÷10Vdc

On same unit can be used different input:

- 4÷20mA
- 0÷10Vdc
- Potentiometer 10KΩ
- SSR

Communication RS485 is a standard feature of MULTIDRIVE this allows the use of many information like: tension, current, power, load state and all the parameters for diagnostic and configuration. Ulterior advantages of the digital system vs the analogical is the flexibility and the possibility of implement special characteristics without change the hardware. Several strategies can be implemented and selected through the configuration parameters.
With CD-KP, you can have access to the configuration parameters without expose at the dangerous voltage inside the cabinet and without stop the plant.

2.2 CD-KP

The CD-KP is designed to be connected with all CD Automation's Thyristor units via RS485 communication. On front unit is possible to read the principal operational parameters of the unit like: power, tension, current, reference, alarms, etc.
One of these variables can be selected and retransmitted via an isolated output (4÷20mA or 0÷10V)
All the menus (except the operator menu) can be protected by password to avoid accidental change of configuration parameters by unauthorised personnel.
On front unit is also available a plug-in connector RS485 for connect a PC with the Thyristor units without open the cabinet and without stop the production process.

Technical Specification:

- Use in Local/Remote
- Set Point Ramp UP - Down
- Scroll selection of:
  - Set point
  - Power output
  - Current
  - Voltage
- Display indication for:
  - Heater Break alarm
  - SCR short circuit
- Password for configuration parameters
- Plug-in connector on front to use software configurator
- Retransmission (4-20mA or 0-10Vdc) of one of these parameters: Power PV, Current, Voltage.
- Dimension 48x96x92mm (LxAxP)
- Comply with EMC, CE marked

2.3 CD-EASY

CD-EASY is a Memory of support used for maintenance people that is not confident in personal computer.
With the CD-EASY is possible memorize the configuration of one Thyristor Unit and paste it into another in few seconds.
CD-EASY could be loaded with the personal configuration of the unit and stored together with the system drawings in a convenient place, enabling unit reconfiguration within seconds if require.

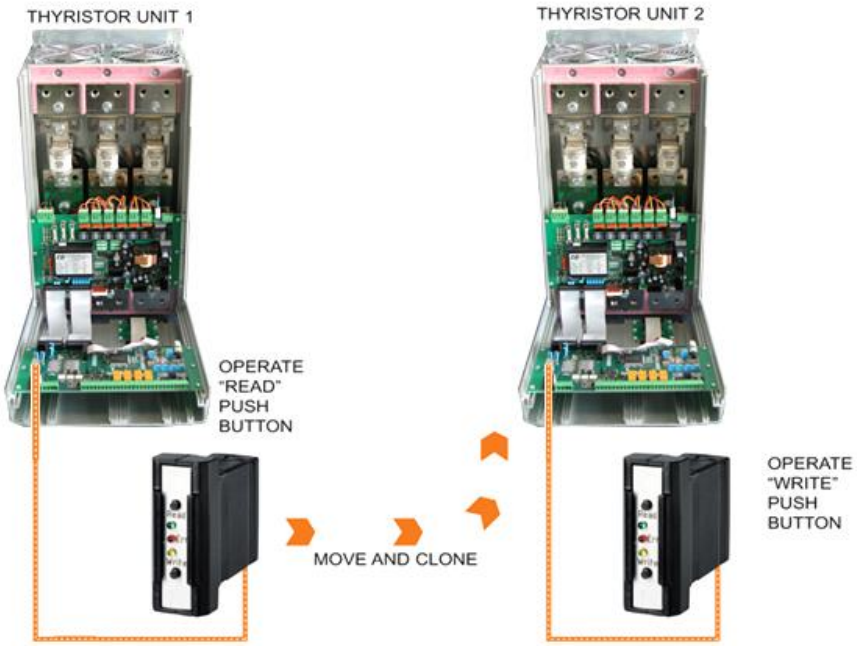

2.4 Software Configurator

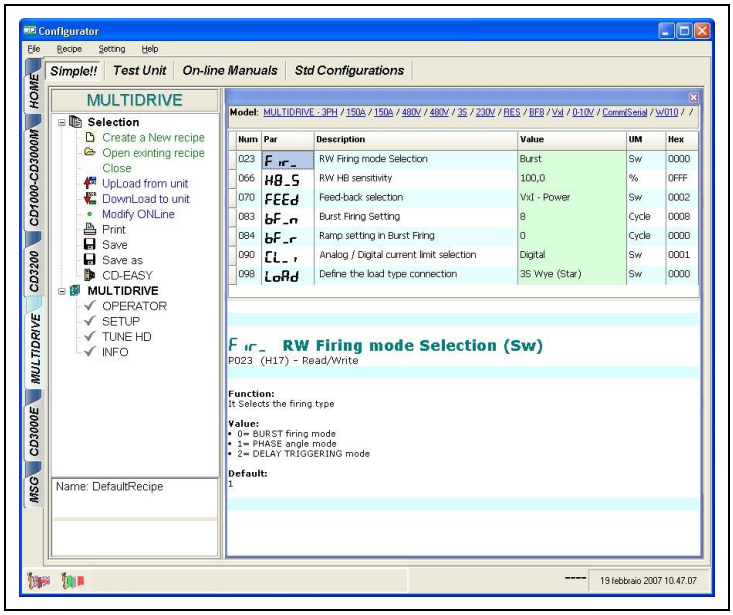

The software configuration is free and is possible download it from our site: www.cdautomation.com

If the Order Code is in line with requirement, then MULTIDRIVE has been already configured in Factory and it's ready to use.
You need the software only to modify the ordered configuration. Anyway we suggest to check the unit on the machine with the "Test unit" section.

For install the software, launch the program and follow the instructions on the screen.

To connect the unit at the PC, it's necessary use the programming cable connected between the PG connector (see par. 12.8) and the serial port RS232 of the PC.

The programming cable is not included.

With the CD-RS serial converter is possible configure the Thyristor unit also through the RS485 (see par. 12.9).
For this solution, the programming cable is not necessary.

Run the software configurator and set the serial port of the PC like the parameters P114 bOUd and P115 Addr of the Thyristor unit.

3 Quick Start

Caution: *this procedure must be performed only by qualified persons.*

If the Order Code of the Thyristor unit is in line with what you really need, then MULTIDRIVE has been already configured in Factory and you just need to do the following steps:

1. Verify the MULTIDRIVE Sizing. Making sure that:
   - The load current is equal or less than the MAX current of MULTIDRIVE.
   - The load voltage is equal or less than the MAX voltage of MULTIDRIVE.

   (see par. 4)

2. Verify the Order Code
   (see par. 5.2)

3. Verify the Installation
   (see par. 6)

4. Verify the Diagram of control connection:
   - All auxiliary connections must be done in line with wirings on this manual.
   - Verify that there isn't a short circuit on the load.

   (see par. 7.5)

5. Supply the Electronic boards
   (see Order Code)

6. If not specified in the Order Code:
   - Set the Load Voltage in the parameter P116 U_OP.
   - Set the Load Current in the parameter P119 A_Lo.

7. Make the Current Limit Procedure
   (see par. 11.5)

8. With Burst Firing (BF) or Heater Break Alarm (HB)
   make the Calibration procedure
   (see par. 9.4)

The MULTIDRIVE Thyristor unit is ready to start.

4 MULTIDRIVE Sizing

4.1.1 Star wiring with resistive load

$$I = \frac{P}{1{,}73V}$$

V = Nominal voltage phase to phase
I = Nominal current of the load
P = Nominal power of the load

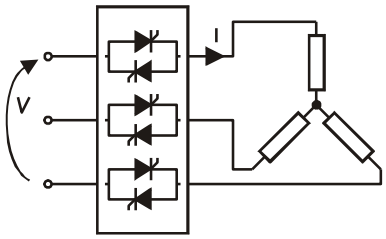

4.1.2 Star wiring with inductive load

$$I = \frac{P}{1{,}73V\cos\phi}$$

V = Nominal voltage phase to phase
I = Nominal current of the load
P = Nominal power of the load

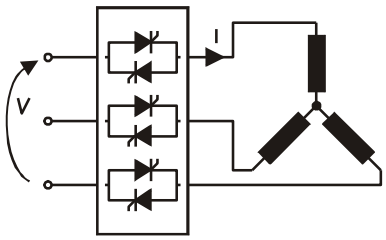

4.1.3 Delta wiring with resistive load

$$I = \frac{P}{1{,}73V}$$

V = Nominal voltage phase to phase
I = Nominal current of the load
P = Nominal power of the load

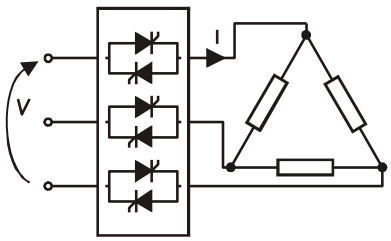

4.1.4 Delta wiring with inductive load

$$I = \frac{P}{1{,}73V\cos\phi}$$

V = Nominal voltage phase to phase
I = Nominal current of the load
P = Nominal power of the load

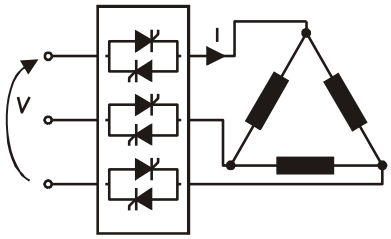

4.1.5 Open Delta wiring with resistive load

$$I = \frac{P}{3V}$$

V = Nominal voltage phase to phase
I = Nominal current of the load
P = Nominal power of the load

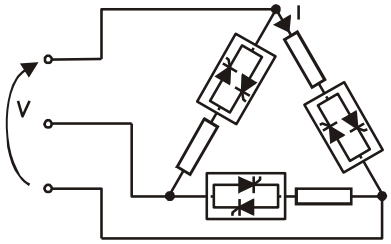

5 Identification and Order Code

5.1 Identification of the unit

Caution: *Before to install, make sure that the Thyristor unit have not damages. If the product has a fault, please contact the dealer from which you purchased the product.*

The identification's label give all the information regarding the factory settings of the Thyristor unit, this label is on the unit, like represented in figure.
Verify that the product is the same thing as ordered (see par. 5.2).

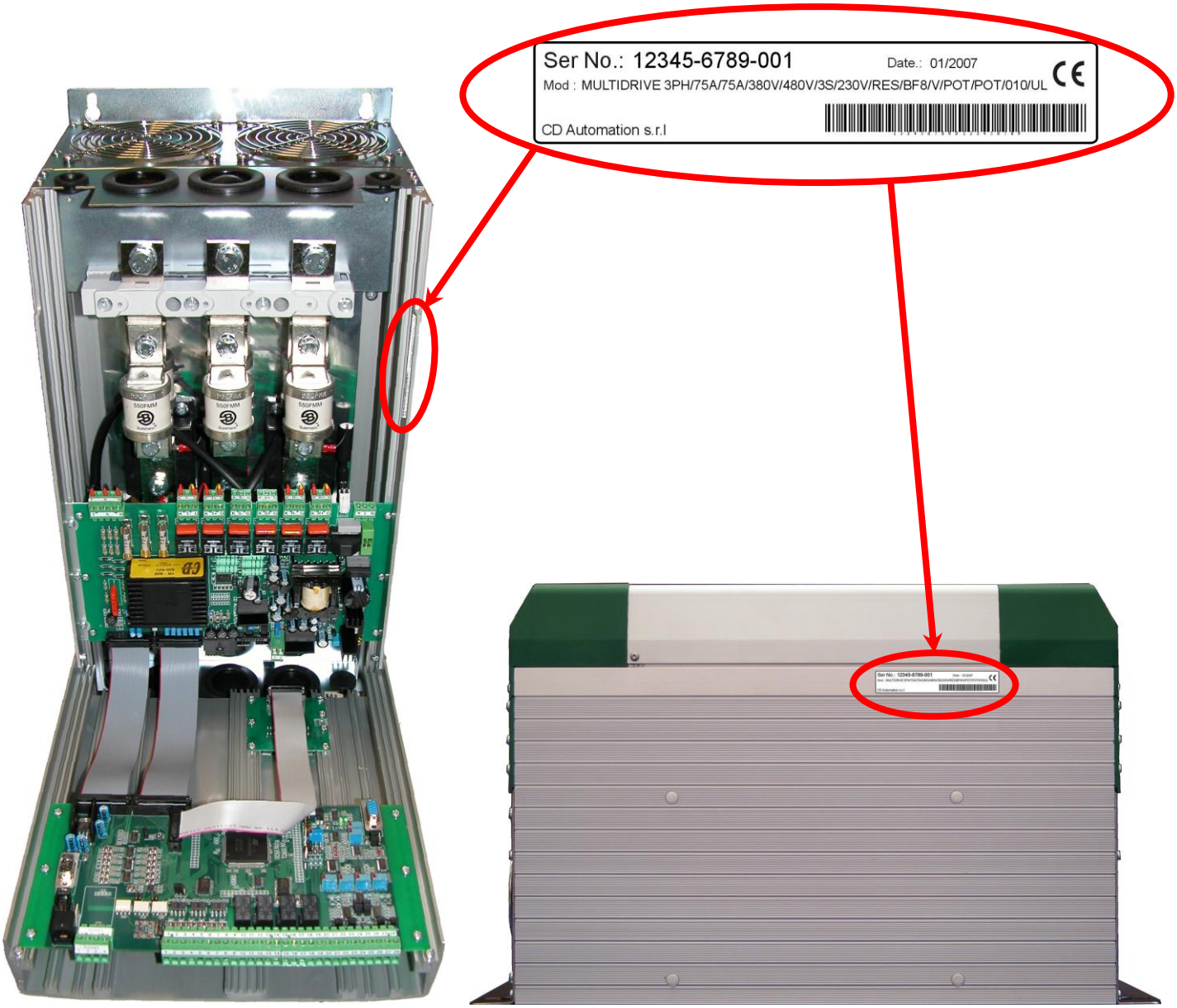

5.2 Order Code

Note 1

	1	2	3	4	5	6		7	8	9	10	11	12	13	14	15	16
MULTIDRIVE 3PH	M	3	_	_	_	_	-	_	_	_	_	_	_	_	_	_	_

4, 5, 6 Current

Description code	Numeric code
35A	0 0 3 5
45A	0 0 4 5
75A	0 0 7 5
100A	0 1 0 0
125A	0 1 2 5
150A	0 1 5 0
225A	0 2 2 5
300A	0 3 0 0
350A	0 3 5 0
400A	0 4 0 0
450A	0 4 5 0
500A	0 5 0 0
600A	0 6 0 0
850A	0 8 5 0
1000A (2)	1 0 0 0
1400A	1 4 0 0
1500A (2)	1 5 0 0
1850A	1 8 5 0
2000A (2)	2 0 0 0
2400A	2 4 0 0
2700A (2)	2 7 0 0

7 Max Voltage

Description code	Numeric code
480V	4
600V	6
690V	7

8 Aux. Voltage supply

Description code	Numeric code
110V	1
230V	2

9 Input

Description code	Numeric code
SSR	S
0:10V dc	V
4:20mA	A
10KPot	K
RS485	R

10 Firing

Description code	Numeric code
Zero Crossing ZC	Z
Single Cycle SC	C
Burst Firing BF	B
Soft Start + Burst Firing S+BF	J
Delayed Triggering + Burst Firing DT+BF	D
Phase Angle PA	P
Soft Start + Phase Angle S+PA	E

11 Control Mode

Description code	Numeric code
Open Loop	0
Voltage Feed Back V	U
Power Feed Back VxI	W
Current Feed Back I	I
External Feed Back	E

12 Option

Description code	Numeric code
4:20mA Retransmission Load Current and Control Mode (3)	A
0:10V Retransmission Load Current and Control Mode (3)	V

13 Fan Voltage

Description code	Numeric code
Fan Voltage equal to Aux. Voltage	3

14 Approvals

Description code	Numeric code
CE EMC For European Market	0
cUL For American Market up to 500A	L (4)

15 Manual

Description code	Numeric code
None	0
Italian Manual	1
English Manual	2
German Manual	3
French Manual	4

16 Load type/Connection

Description code	Numeric code
Resistive Load/ Delta Connection	1
Resistive Load/ Star Connection	2
Resistive Load/ Star Connection + Neutral	7
Transformer Load/ Delta Connection	3
Transformer Load/ Star Connection	4
Transformer Load/Star Connection + Neutral	5
Resistive Load/ Open delta	6

LEGEND

IF = Internal Fixed Fuse
CT = Current Transformer
HB = Heater Break Alarm

Note (1): After 16th digit write current and voltage of load inside brackets Ex. (190A-400V). this is to receive the Thyristor unit already tuned from CD Automation
Note (2): Rating not available at 690V
Note (3): In total are available 4 Analog output . One dedicated to control mode and the other 3 for current on phases 1-2-3
Note (4): cUL approval up to 500A included

6 Installation

Caution: *Don't install near the hot elements or near the units that could give electromagnetic interferences.*

The MULTIDRIVE Thyristor unit must be always mounted in vertical position to improve air cooling on heat-sink. Maintain the minimum distances in vertical and in horizontal as represented.
When more unit has mounted inside the cabinet maintain the air circulation like represented in figure.
Sometimes is necessary installing a fan to have better air circulation.

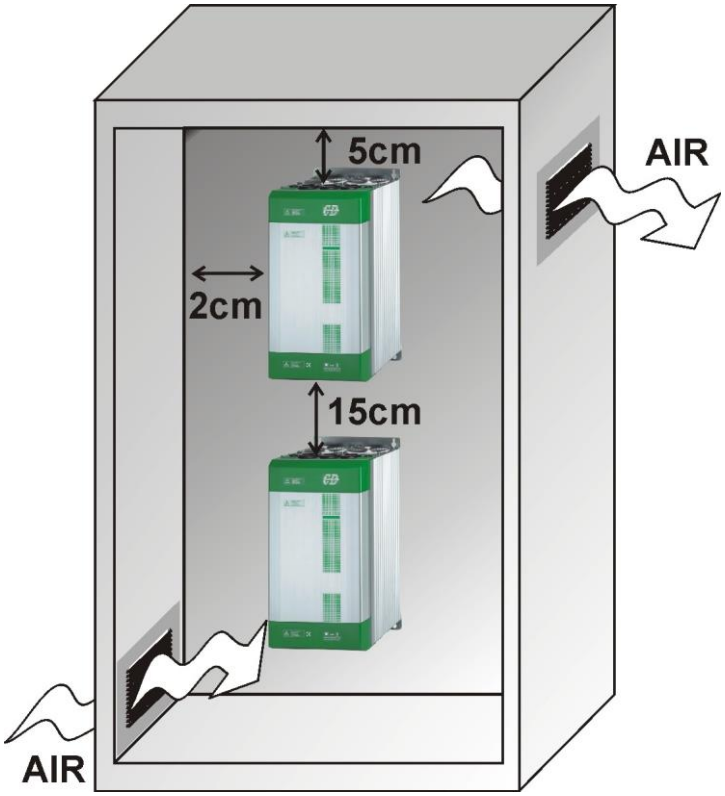

6.1 Environmental installation conditions

Ambient temperature	0-45°C at nominal current. Over 45°C use the derating curve (see par. 8.1)
Storage temperature	-25°C to 70°C
Installation place	Don't install at direct sun light, where there are conductive dust, corrosive gas, vibration or water and also in salty environmental.
Altitude	Up to 1000 meter over sea level. For higher altitude reduce the nominal current of 2% for each 100m over 1000m
Humidity	From 5 to 95% without condense and ice

6.2 Dimensions and Weight

MULTIDRIVE 3PH 35A÷225A (S13)	MULTIDRIVE 3PH 300A÷600A (S14)	MULTIDRIVE 3PH 850A (S15)
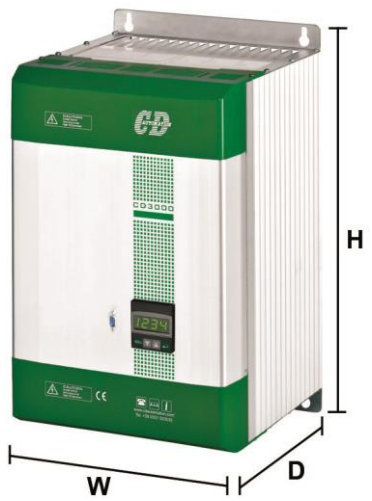		

Size	W(mm)	H(mm)	D(mm)	Weight (kg)
35A (S13)	262	440	270	18
45A (S13)	262	440	270	18
75A (S13)	262	440	270	18
100A (S13)	262	440	270	18
125A (S13)	262	440	270	18
150A (S13)	262	440	270	18
225A (S13)	262	440	270	18
300A (S14)	262	520	270	22,5
350A (S14)	262	520	270	22,5
400A (S14)	262	520	270	22,5
450A (S14)	262	520	270	22,5
500A (S14)	262	520	270	22,5
600A (S14)	262	520	270	22,5
850A(S15)	400	520	270	43

6.3 Fixing holes

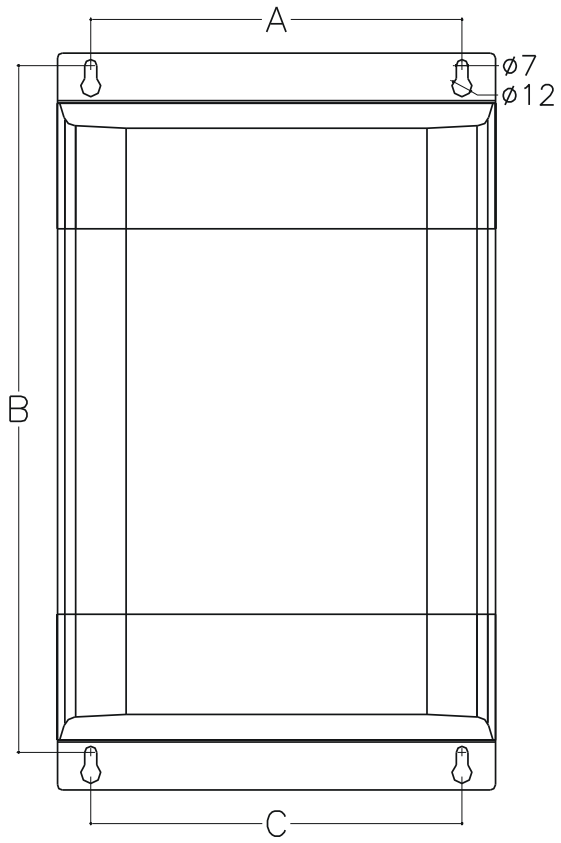

Size	A(mm)	B(mm)	C(mm)
35A (S13)	222	410	222
45A (S13)	222	410	222
75A (S13)	222	410	222
100A (S13)	222	410	222
125A (S13)	222	410	222
150A (S13)	222	410	222
225A (S13)	222	410	222
300A (S14)	222	490	222
350A (S14)	222	490	222
400A (S14)	222	490	222
450A (S14)	222	490	222
500A (S14)	222	490	222
600A (S14)	222	490	222
850A (S15)	360	490	360

7 Wiring instructions

Caution: *this procedure must be performed only by qualified persons.*

The Thyristor unit could be susceptible to interferences lost by near equipments or by the power supply, for this reason in accord to the fundamental practices rules is opportune take some precautions:

- The electronic circuit of the Thyristor unit must be supplied from a dedicated voltage and not with inductive or capacitive loads. We recommend the use of a screened transformer.
- The coil contactor, the relays and other inductive loads must be equipped with opportune RC filter.
- Use shielded bipolar cables for all the input and output signals.
- The signal cables must not be near and parallel to the power cables.
- Local regulations regarding electrical installation should be rigidly observed.

For safety connect the heat-sink to the earth with his terminal.

7.1 Removing the cover

Instructions for open the thyristor unit size S13,S14,S15

7.2 Wiring details

Use copper cables and wires rated for use at 75°C only.

7.2.1 Power cable torque (suggested)

Current	Connector Type	Torque Lb-in (N-m)	Wire Range AWG / kcmil	Wire Terminal
35A,45A,75A 125A,150A,225A	Terminal Block M8	265 (30.0)	8 4/0	Copper wire Compact (Solid) Stranded
300A	Bus Bar with M8 screw	505 (57.0)	2x1/0 350	UL Listed (ZMVV) Copper Tube Crimp. Lug
350A,400A	Bus Bar with M10 screw	505 (57.0)	2x3/0 600	UL Listed (ZMVV) Copper Tube Crimp. Lug
450A	Bus Bar with M10 screw	505 (57.0)	Bus bar 30x6mm	
500,600,850A	Bus Bar with M10 screw	505 (57.0)	Bus bar 60x4mm	

7.2.2 Power cable dimensions (suggested)

Current	Supply			Load		
	Cable		Screw	Cable		Screw
	mm²	AWG	M	mm²	AWG	M
35A (S13)	10	8	M8	10	8	M8
45A (S13)	10	8	M8	10	8	M8
75A (S13)	25	4	M8	25	4	M8
100A (S13)	35	3	M8	35	3	M8
125A (S13)	50	1	M8	50	1	M8
150A (S13)	70	1/0	M8	70	1/0	M8
225A (S13)	120	4/0	M8	120	4/0	M8
300A (S14)	2 x 70	2 x 1/0	M8	2 x 70	2 x 1/0	M8
350A (S14)	2 x 95	2 x 3/0	M10	2 x 95	2 x 3/0	M10
400A (S14)	2 x 95	2 x 3/0	M10	2 x 95	2 x 3/0	M10
450A (S14)	Bus Bar		30 x 6 mm	Bus Bar		30 x 6 mm
500A (S14)	Bus Bar		60 x 4 mm	Bus Bar		60 x 4 mm
600A (S14)	Bus Bar		60 x 4 mm	Bus Bar		60 x 4 mm
850A (S15)	Bus Bar		60 x 4 mm	Bus Bar		60 x 4 mm

7.2.3 Cable dimensions (suggested) of Earth and of the Command Terminals

Current	Earth			Command Terminals		
	Cable		Screw	Cable		
	mm²	AWG	M	mm²	AWG	
35A (S13)	4	12	M8	0,50	18	
45A (S13)	6	10	M8	0,50	18	
75A (S13)	10	8	M8	0,50	18	
100A (S13)	16	6	M8	0,50	18	
125A (S13)	16	6	M8	0,50	18	
150A (S13)	16	6	M8	0,50	18	
225A (S13)	25	4	M8	0,50	18	
300A (S14)	50	1	M8	0,50	18	
350A (S14)	50	1	M8	0,50	18	
400A (S14)	50	1	M8	0,50	18	
450A (S14)	70	1/0	M8	0,50	18	
500A (S14)	70	1/0	M8	0,50	18	
600A (S14)	70	1/0	M8	0,50	18	
850A (S15)	70	1/0	M8	0,50	18	

7.3 Power Terminals

Warning: *Before connecting or disconnecting the unit check that power and control cables are isolated from voltage sources.*

Terminal	Description
L1	Line Input Phase 1
L2	Line Input Phase 2
L3	Line Input Phase 3
T1	Load Output Phase 1
T2	Load Output Phase 2
T3	Load Output Phase 3

MULTIDRIVE 3PH 35A÷225A (S13)	MULTIDRIVE 3PH 300A÷850A (S14-S15)

7.4 Command Terminals

Warning: *Before connecting or disconnecting the unit check that power and control cables are isolated from voltage sources.*

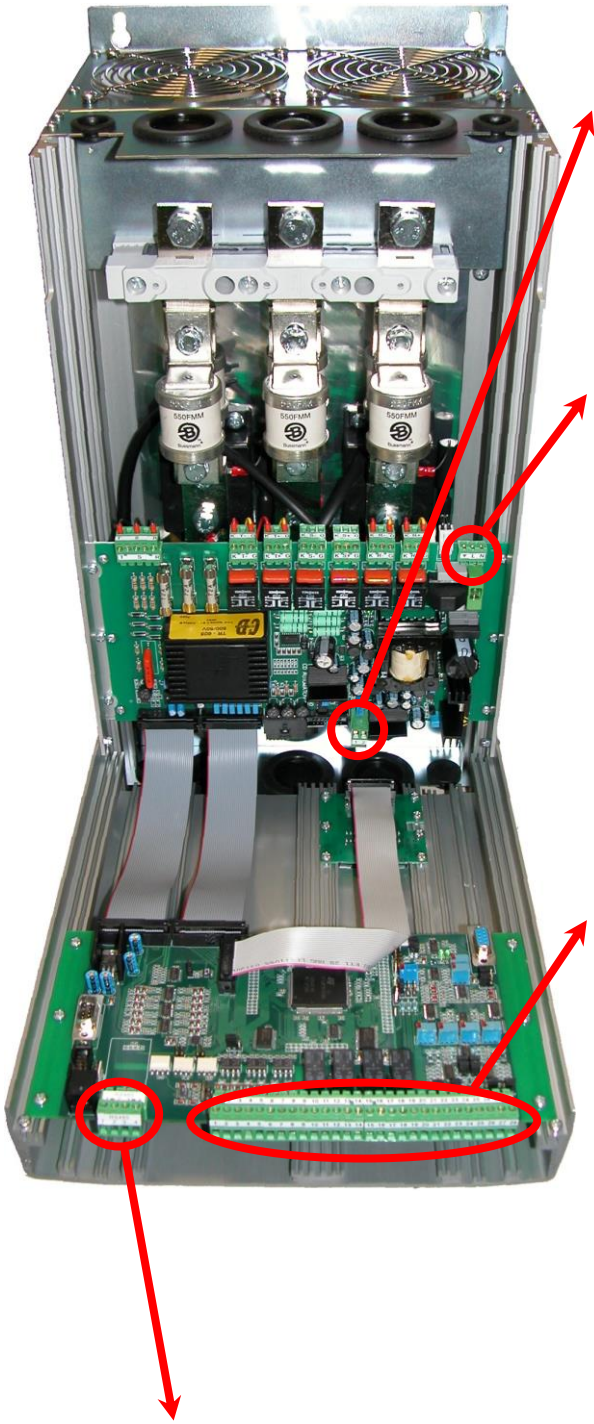

Terminal	Description
1	(+) Input External Feed-Back (0÷10Vdc)
2	(-) Input External Feed-Back (0÷10Vdc)

(see par. 12.3)

Terminal	Description
⏚	Earth
L	Voltage Supply for Electronic Boards
N	Voltage Supply for Electronic Boards

(see par. 12.2)

Terminal	Description
1	Isolated output +24Vdc MAX 20mA
2	GND for Digital Input
3	Digital Input: Reset Alarm
4	Digital Input: Start/Stop
5	Digital Input: Enable
6	Digital Input: External Alarm
7	Digital Input: Calibration
8	Digital Input: Configurable
9	Output relay: Run
10	Common of the contact relay: Run
11	Output relay 1: Critical Alarm
12	Output relay 2: Configurable
13	Output relay 3: Configurable
14	Common of the contact relay 2,3 e 4
15	Common for Analogue Output 4÷20mA
16	Common for Analogue Output 0÷10Vdc
17	(+)Analogue Input 1: Primary
18	(-)GND Analogue Input 1
19	(+)Analogue Input 2: Secondary
20	(-)GND Analogue Input 2
21	(+)Analogue Input 3: Ext. Current Profiler
22	(-)GND Analogue Input 3
23	Analogue Output 1: Power
24	Analogue Output 2: Current RMS phase L1
25	Analogue Output 3: Current RMS phase L2
26	Analogue Output 4: Current RMS phase L3
27	Output +10Vdc MAX 5mA
28	GND for Analogue Input

(see par. 12.4)

Terminal	Description
1	RS485 A
2	RS485 B
3	Internal use
4	Internal use

(see par. 12.9)

7.5 Diagram of control connection

Caution: *this procedure must be performed only by qualified persons.*

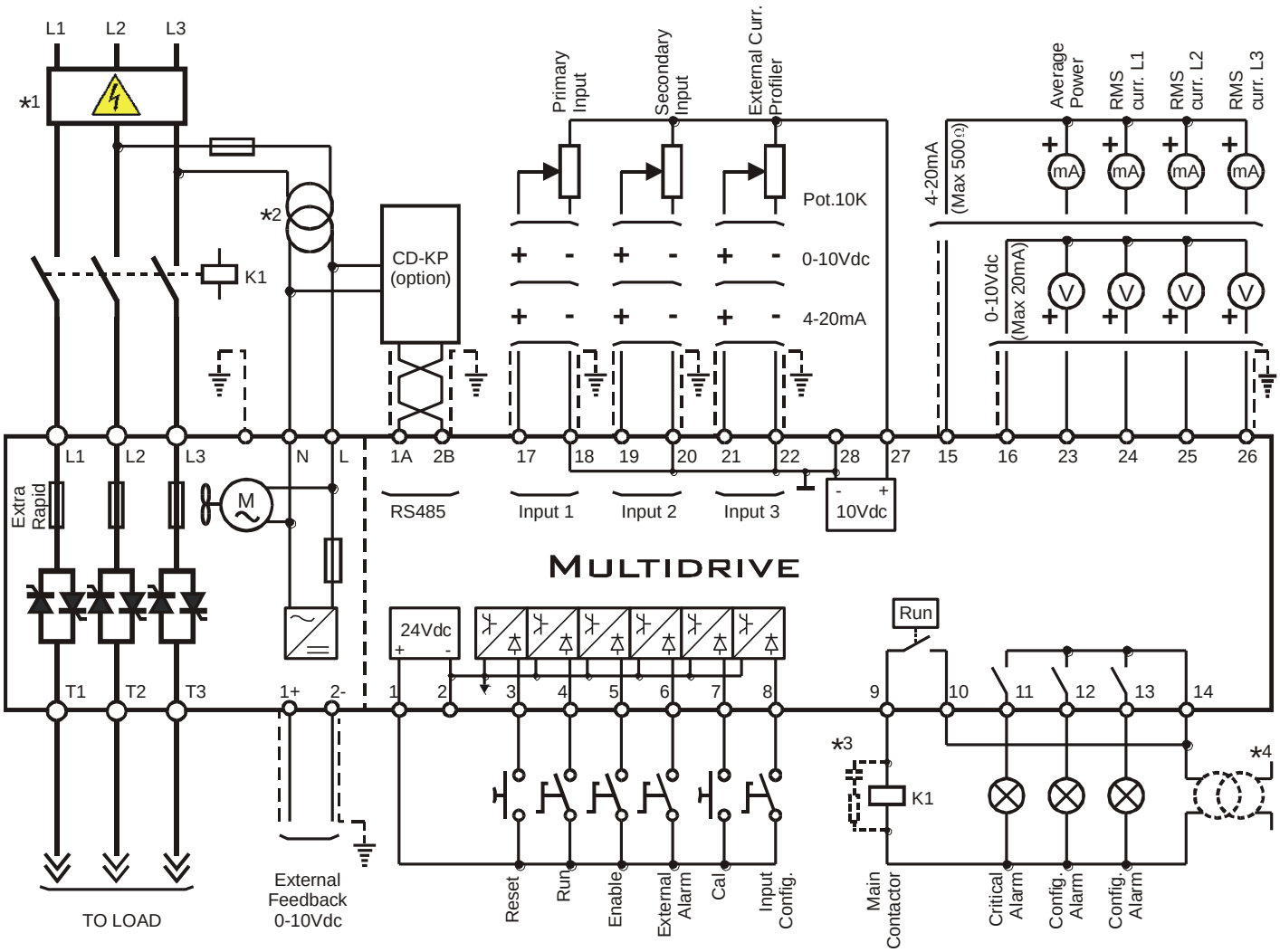

NOTE:

- *1 *The user installation must be protecting by electromagnetic circuit breaker or by fuse isolator.*
- *² *Use an appropriate external transformer based on the voltage supply of the electronic board (see the identification label)*
- *³ *The coil contactor, the relays and other inductive loads must be equipped with opportune RC filter.*
- *4 *Before give the Start command supply the auxiliary voltage.*

Load Type

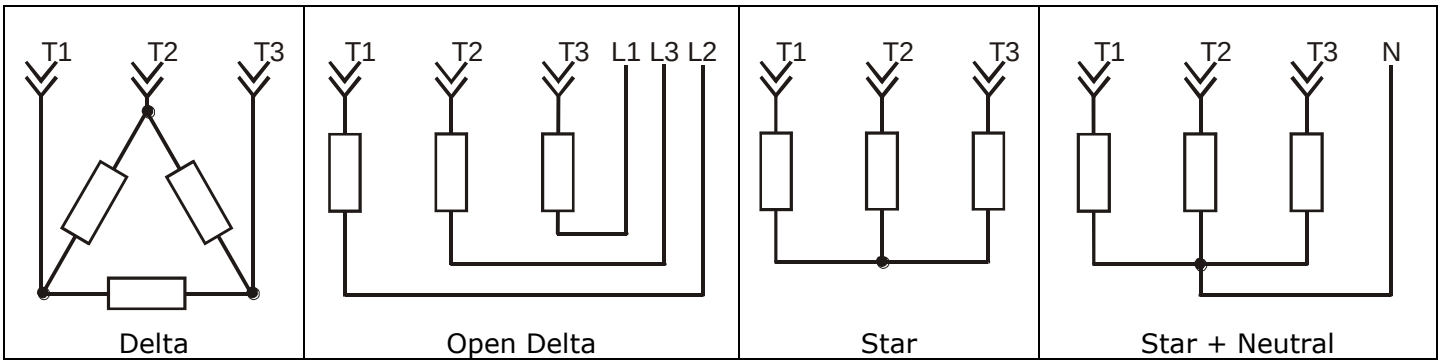

8 Power output features

Current	Voltage range	Repetitive peak reverse voltage		Latching current	Max peak one cycle	Leakage current	I^2T value max	Frequency range	Power loss	Isolation Voltage
(A)	(V)	(480V)	(600V)	(mAeff)	(10msec.) (A)	(mAeff)	tp=10msec	(Hz)	I=Inom (W)	Vac
35A	330÷600	1600	1600	450	1900	15	18050	47÷70	84	3000
45A	330÷600	1600	1600	450	1900	15	18220	47÷70	111	3000
75A	330÷600	1600	1600	450	1900	15	18350	47÷70	204	3000
100A	330÷600	1600	1600	450	1900	15	18900	47÷70	288	3000
125A	330÷600	1600	1600	450	1900	15	19100	47÷70	384	3000
150A	330÷600	1600	1600	300	4800	15	108000	47÷70	426	3000
225A	330÷600	1600	1600	300	4800	15	109000	47÷70	717	3000
300A	330÷600	1600	1600	300	5000	15	125000	47÷70	960	3000
350A	330÷600	1600	1600	200	7800	15	300000	47÷70	1008	3000
400A	330÷600	1600	1600	200	7800	15	306000	47÷70	1191	3000
450A	330÷600	1600	1600	1000	8000	15	1125000	47÷70	1251	2500
500A	330÷600	1600	1600	1000	15000	15	1125000	47÷70	1419	2500
600A	330÷600	1600	1600	1000	15000	15	1125000	47÷70	1767	2500
850A	330÷600	1600	1600	1000	15000	15	1125000	47÷70	2550	2500

8.1 Derating curve

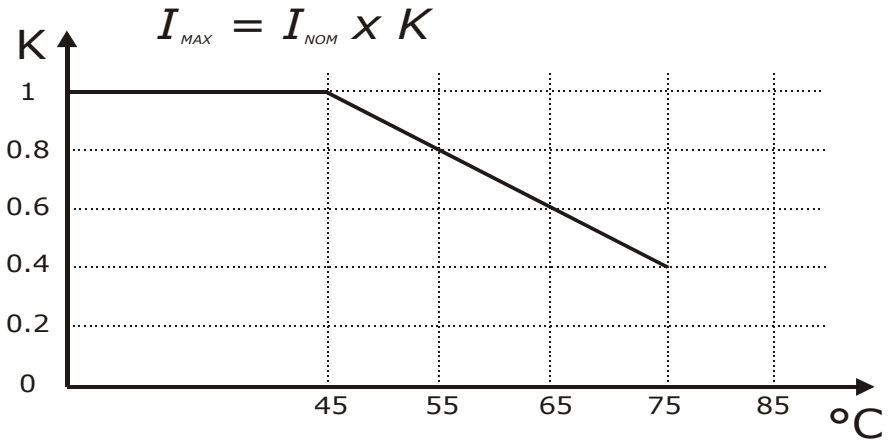

8.2 Cooling fans

The MULTIDRIVE thyristor unit is equipped with a cooling fans. The supply votage is the same of the electronic board (see par. 12.2).
The fan's power consumption is below listed:

Size	CE Number of fans	c UL us LISTED Number of fans
35A, 45A, 75A, 100A 125A, 150A, 225A	Two Fans - 30W	Two Fans - 30W
350A, 450A	Two Fans - 30W	Four Fan - 60W
300A, 400A, 500A,600A	Four Fan - 60W	Four Fan - 60W
850A	Six Fan - 90W	Six Fan - 90W

9 Led status and Alarms

9.1 LED Status Table

On the DDC30 Electronic board there are two LED that indicates the state of the Electronic cards:

LED For All size	STATUS	DESCRIPTION
LD1	○	The power supply is not connected or fault on the electronic board
	●	Fault on the electronic board
	✳	Electronic board is OK
LD2	○	The power supply is not connected
	●	The power supply is connected
	○	= OFF
	●	= ON
	✳	= Flashing

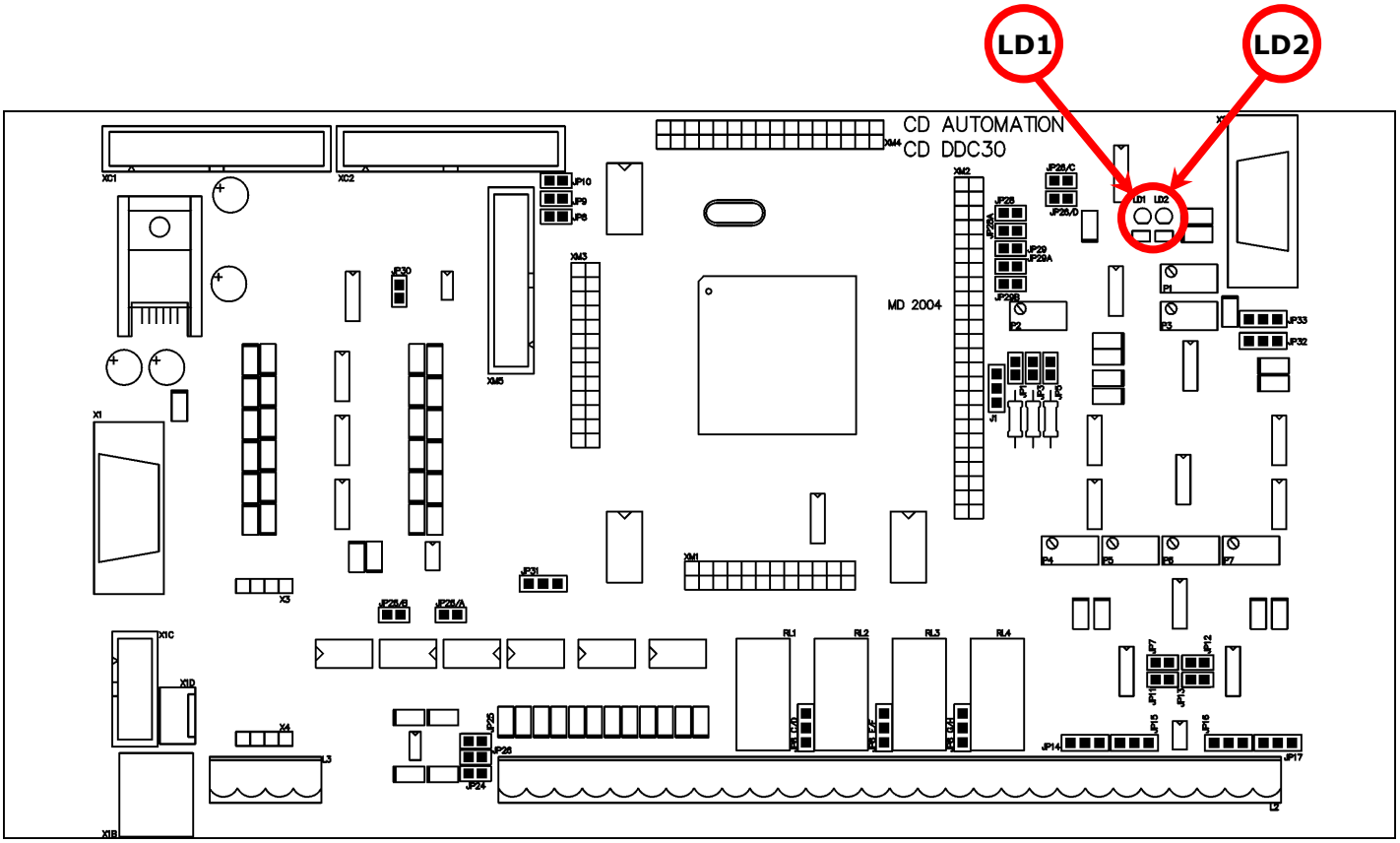

9.2 Critical Alarms

When a critical alarm is active, it stops the MULTIDRIVE thyristor unit and activates the relative digital output (terminal 11).
The parameter P001 AL_1 allows to visualize the state of these alarms

9.2.1 Phase loss

This critical alarm is active when one of the three phases R-S-T is loss. The phase loss could be also activated by an interrupted fuse.
For restart the thyristor unit, check the presence of the line voltage on the power terminals L1, L2, L3 and check the state of the internal fuses, When the problem is solved before to restart is necessary use the digital input: "Reset Alarm" (see par. 12.6).

9.2.2 External Alarm

This critical alarm is active when the Digital input: "External Alarm" is activated.
For restart the thyristor unit, you must disarm the external alarm. When the problem is solved before to restart is necessary use the digital input: "Reset Alarm" (see par. 12.6).

9.2.3 Heat-sink Over temperature

This critical alarm is active when the thermal switch mounted on the heat-sink is activated.
For restart the thyristor unit, you must wait that the heat-sink returns at the safety temperature. When the problem is solved before to restart is necessary use the digital input: "Reset Alarm"
(see par. 12.6).
If this alarm becomes active, check if the indications described in the "par. 6" of this manual are respected.

Caution: *this procedure must be performed only by qualified persons.*

9.3 Not Critical Alarm

The Not Critical Alarm, doesn't stop the MULTIDRIVE thyristor unit, but is possible to associate an digital output at these alarms (see par. 12.7).
The parameter P002 AL_2 allows to visualize the state of these alarms

9.3.1 SCR Short Circuit

This alarm is active when MULTIDRIVE read the output current in absence of the input signal. This is possible if there are a short circuit on the thyristor or if there are a wrong wiring of the load.
When the problem is solved is necessary use the digital input: "Reset Alarm" (see par. 12.6).

9.3.2 Unbalanced Load

This alarm is active when one of the three load current (read on the terminals T1, T2, T3) differs from the others more than 30%.
The unbalanced alarm could be active also if there are a wrong wiring of the load.
When the problem is solved is necessary use the digital input: "Reset Alarm" (see par. 12.6).

9.3.3 Heater Break alarm (HB)

This alarm is active when the load current decrease under the threshold set on the parameter P066 Hb_S
The Heater Break alarm could be active also if there are a wrong wiring of the load.
When the problem is solved is necessary use the digital input: "Reset Alarm" (see par. 12.6).
The Heater Break alarm to work properly must have an input signal more then 25% of the nominal current value.

Caution: *In the first start, and each time that the load is replaced, it's necessary make the Calibration procedure.*

9.4 Calibration Procedure

The Calibration procedure is an automatic procedure that save in memory the three different values of load current (for each phase)
This procedure is necessary if you use the Burst Firing (BF) or if you use the Heater Break Alarm.
To make the Calibration procedure follow these steps:

- Give the power supply and start the thyristor unit (see par. 12.6).
- Activate the digital input: "Cal" (terminal 6).
- The MULTIDRIVE thyristor unit give the maximum output voltage.
- After a few seconds the values of voltage and current are stored in memory.
- The MULTIDRIVE thyristor unit returns to the initial situation.
- Stop the thyristor unit.

The Calibration procedure is done.

10 Control Panel

The Control Panel is placed on the front of the thyristor unit, on his display you can visualize the alarms, the input and output signals and all the configuration parameters (see par. 0).

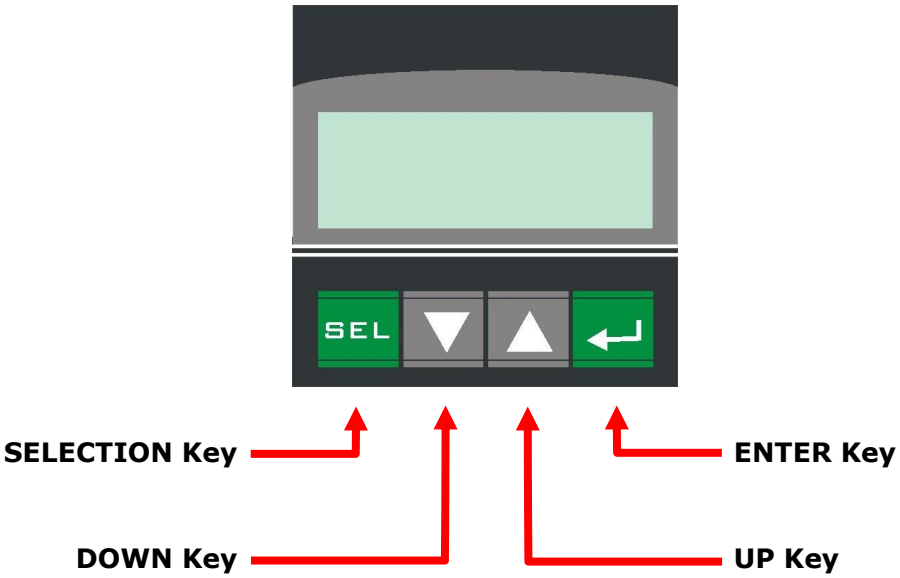

The function keys is the following:
- The SELECTION key is used for enter and exit from the menu.
- The UP key and DOWN key is used to scroll the parameters in the menu and to change data.
- The ENTER key is used to edit the parameters and to save the modified values.

The Control Panel have three menu, and to enter in one of them you must set correctly the parameter P000 PASS :
- Operator Menu (P000 PASS = 0)
  This menù contains a reading parameters that give information on the state of the unit, it include also the base parameters for quick start, like the value of current and voltage load and the Set-point data.
- Hardware Menu (P000 PASS = 5)
  This menu contains all the configuration parameters for analogic and digital I/O, and the parameters to set the serial port like the address and the baudrate.
- Setup Menu (P000 PASS = 10)
  This menù contains all the setting parameters to configure the thyristor unit, like the firing type, the current limit, [ecc].

10.1 Scroll the parameters

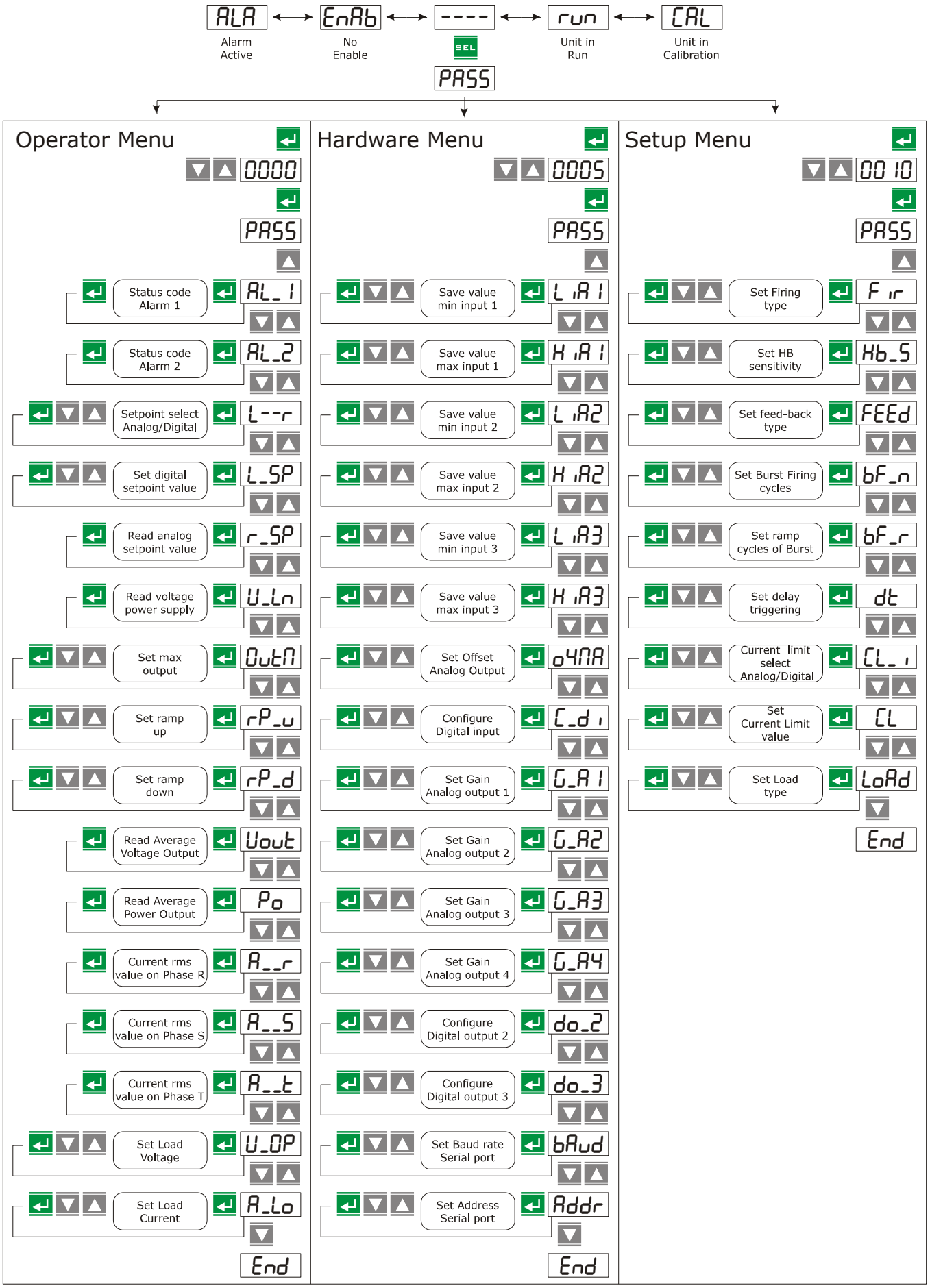

10.2 Operator Menu

- **Code of Critical alarm:** This parameter read only gives information on the following alarms that they stop the MULTIDRIVE.

Parameter Display	Parameter Name	Contents	UM	Default Value UM	Min Value DEC	Max Value DEC	Min Value UM	Max Value UM	Par. Type
AL_1	AL-1	Code of Critical alarm	ALM	–	0	1	0	1	R

Sample Values and Note	
Phase Loss	01
External Alarm	20
Heat Sink Over Temp.	40

- **Code of Not Critical alarm:** This parameter read only gives information on the following alarms that don't stop the MULTIDRIVE.

Parameter Display	Parameter Name	Contents	UM	Default Value UM	Min Value DEC	Max Value DEC	Min Value UM	Max Value UM	Par. Type
AL_2	AL-2	Code of Not Critical alarm	ALM	–	0	1	0	1	R

Sample Values and Note	
Thyristor Failure	01
Heater Break Alarm	02
Unbalanced Load	04

- **Setpoint selection Analog / Digital:** This parameter determines the use of the analog setpoint (terminal 17-18) or of the digital setpoint setted in the parameter P004 L_SP.

Parameter Display	Parameter Name	Contents	UM	Default Value UM	Min Value DEC	Max Value DEC	Min Value UM	Max Value UM	Par. Type
L--r	L--r	Local/Remote setpoint selection	Sw	0	0	1	0	1	R/W

Sample Values and Note	
Analog Set Point	00
Digital Set Point	01

- **Setpoint Digital Value:** This parameter contains the digital setpoint value, active with P003 L--r = 1

Parameter Display	Parameter Name	Contents	UM	Default Value UM	Min Value DEC	Max Value DEC	Min Value UM	Max Value UM	Par. Type
L_SP	L_SP	Setpoint Digital Value	%	0	0	4095	0	100,0	R/W

- **Remote Set-point value:** This parameter read only contains the analog setpoint value present at the terminals 17-18 of the command terminals.

Parameter Display	Parameter Name	Contents	UM	Default Value UM	Min Value DEC	Max Value DEC	Min Value UM	Max Value UM	Par. Type
r_SP	r_SP	Remote Setpoint value	%	0	0	4095	0	100,0	R

Sample Values and Note

With input 4÷20mA:

Input 4mA P008 r_SP = 0

Input 12mA P008 r_SP = 50

Input 20mA P008 r_SP = 100

- **Voltage Supply:** This parameter read only contains the voltage value of the power supply.

Parameter Display	Parameter Name	Contents	UM	Default Value UM	Min Value DEC	Max Value DEC	Min Value UM	Max Value UM	Par. Type
U_Ln	V_Ln	Voltage Supply	V	–	0	4095	0	1000	R

- **Maximum Output:** This parameter set in % the maximum output voltage.

Parameter Display	Parameter Name	Contents	UM	Default Value UM	Min Value DEC	Max Value DEC	Min Value UM	Max Value UM	Par. Type
OutN	OutN	Maximum Output	%	100,0	2048	4095	50,0	100,0	R/W

- **Setpoint Ramp Up:** This parameter set the Setpoint Ramp Up.

Parameter Display	Parameter Name	Contents	UM	Default Value UM	Min Value DEC	Max Value DEC	Min Value UM	Max Value UM	Par. Type
rP_u	Rp_u	Set Ramp Up	sec	2	0	1000	0	1000	R/W

- **Setpoint Ramp Down:** This parameter set the Setpoint Ramp Down.

Parameter Display	Parameter Name	Contents	UM	Default Value UM	Min Value DEC	Max Value DEC	Min Value UM	Max Value UM	Par. Type
rP_d	Rp_d	Set Ramp Down	sec	2	0	1000	0	1000	R/W

- **Voltage Output:** This parameter read only show the voltage output .

Parameter Display	Parameter Name	Contents	UM	Default Value UM	Min Value DEC	Max Value DEC	Min Value UM	Max Value UM	Par. Type
Uout	Vout	Voltage Output	V	–	0	1000	0	1000	R

- **Power Output:** This parameter read only show the power output .

Parameter Display	Parameter Name	Contents	UM	Default Value UM	Min Value DEC	Max Value DEC	Min Value UM	Max Value UM	Par. Type
Po	Po	Power Output	KW	–	0	1000	0	1000	R

- **RMS Current value on phase R:**

Parameter Display	Parameter Name	Contents	UM	Default Value UM	Min Value DEC	Max Value DEC	Min Value UM	Max Value UM	Par. Type
A__r	A__r	RMS Current value on phase R	A	–	0	1000	0	1000	R

- **RMS Current value on phase S:**

Parameter Display	Parameter Name	Contents	UM	Default Value UM	Min Value DEC	Max Value DEC	Min Value UM	Max Value UM	Par. Type
A__S	A__S	RMS Current value on phase S	A	–	0	1000	0	1000	R

- **RMS Current value on phase T:**

Parameter Display	Parameter Name	Contents	UM	Default Value UM	Min Value DEC	Max Value DEC	Min Value UM	Max Value UM	Par. Type
A__t	A__t	RMS Current value on phase T	A	–	0	1000	0	1000	R

- **Set Operative Voltage:** This parameter is used to set in volt the operative voltage of the load.

Parameter Display	Parameter Name	Contents	UM	Default Value UM	Min Value DEC	Max Value DEC	Min Value UM	Max Value UM	Par. Type
U_OP	U_OP	Operative Voltage	V	400*	100	4095	24	1000	R/W

* if not specified in the Order Code

- **Load Nominal Current:** This parameter is used to set the Load nominal Current.

Parameter Display	Parameter Name	Contents	UM	Default Value UM	Min Value DEC	Max Value DEC	Min Value UM	Max Value UM	Par. Type
A_Lo	A_Lo	Load Nominal Current	A	Multi-drive Max Current	0	3000	0	3000	R/W

10.3 Hardware Menu

- **Calibration MIN value of analog input 1:** This parameter saves in memory the min value of the primary analog input.

Parameter Display	Parameter Name	Contents	UM	Default Value UM	Min Value DEC	Max Value DEC	Min Value UM	Max Value UM	Par. Type
LiA1	LiA1	Save value Minimum input 1	Sw	0	0	1	0	1	R/W

Sample Values and Note	
Default Value	00
Save Value	01

The input Calibration procedure is necessary only if you change the input type (ex. from 0÷10V to 4÷20mA) and must be performed only by qualified persons.

- **Calibration MAX value of analog input 1:** This parameter saves in memory the Max value of the primary analog input.

Parameter Display	Parameter Name	Contents	UM	Default Value UM	Min Value DEC	Max Value DEC	Min Value UM	Max Value UM	Par. Type
HiA1	HiA1	Save value Maximum input 1	Sw	0	0	1	0	1	R/W

Sample Values and Note	
Default Value	00
Save Value	01

The input Calibration procedure is necessary only if you change the input type (ex. from 0÷10V to 4÷20mA) and must be performed only by qualified persons.

- **Calibration MIN value of analog input 2:** This parameter saves in memory the min value of the secondary analog input.

Parameter Display	Parameter Name	Contents	UM	Default Value UM	Min Value DEC	Max Value DEC	Min Value UM	Max Value UM	Par. Type
LiA2	LiA2	Save value Minimum input 1	Sw	0	0	1	0	1	R/W

Sample Values and Note	
Default Value	00
Save Value	01

The input Calibration procedure is necessary only if you change the input type (ex. from 0÷10V to 4÷20mA) and must be performed only by qualified persons.

- **Calibration MAX value of analog input 2:** This parameter saves in memory the Max value of the secondary analog input.

Parameter Display	Parameter Name	Contents	UM	Default Value UM	Min Value DEC	Max Value DEC	Min Value UM	Max Value UM	Par. Type
H iA2	HiA2	Save value Maximum input 1	Sw	0	0	1	0	1	R/W

Sample Values and Note	
Default Value	00
Save Value	01

The input Calibration procedure is necessary only if you change the input type (ex. from 0÷10V to 4÷20mA) and must be performed only by qualified persons.

- **Calibration MIN value of analog input 3:** This parameter saves in memory the min value of the External Current Profiler analog input.

Parameter Display	Parameter Name	Contents	UM	Default Value UM	Min Value DEC	Max Value DEC	Min Value UM	Max Value UM	Par. Type
L iA3	LiA3	Save value Minimum input 3	Sw	0	0	1	0	1	R/W

Sample Values and Note	
Default Value	00
Save Value	01

The input Calibration procedure is necessary only if you change the input type (ex. from 0÷10V to 4÷20mA) and must be performed only by qualified persons.

- **Calibration MAX value of analog input 3:** This parameter saves in memory the max value of the External Current Profiler analog input.

Parameter Display	Parameter Name	Contents	UM	Default Value UM	Min Value DEC	Max Value DEC	Min Value UM	Max Value UM	Par. Type
H iA3	HiA3	Save value Maximum input 3	Sw	0	0	1	0	1	R/W

Sample Values and Note	
Default Value	00
Save Value	01

The input Calibration procedure is necessary only if you change the input type (ex. from 0÷10V to 4÷20mA) and must be performed only by qualified persons.

- **Offset of the Analog Outputs:** This parameter is used to set the offset for the Analog Outputs.

Parameter Display	Parameter Name	Contents	UM	Default Value UM	Min Value DEC	Max Value DEC	Min Value UM	Max Value UM	Par. Type
o4NA	o4NA	Analogue Output Type (Retransmition)	Sw	0 *	0	1	0	1	R/W

* if not specified in the Order Code

Sample Values and Note	
0 ÷ 10Vdc / 0 ÷ 20mA	00
4 ÷ 20mA	01

- **Digital input configuration (terminal 8):** This parameter selects the function of digital input.

Parameter Display	Parameter Name	Contents	UM	Default Value UM	Min Value DEC	Max Value DEC	Min Value UM	Max Value UM	Par. Type
C_di	C_di	Digital input configuration	ALM	Sw	1	0	4	0	R/W

Sample Values and Note	
Additional Reset Alarm	00
Setpoint Zero	01
Feed-back Selection	02
Setpoint Analog/Digital	03
External Alarm	04

- **Full scale of Analog Output 1 (Power):** This parameter is used to adjust the full scale value of the analog output.

Parameter Display	Parameter Name	Contents	UM	Default Value UM	Min Value DEC	Max Value DEC	Min Value UM	Max Value UM	Par. Type
G_A1	G_A1	Analog Output 1 Scaling	Kw	1000	0	3000	0	3000	R/W

- **Full scale of Analog Output 2 (RMS Voltage Output):** This parameter is used to adjust the full scale value of the analog output.

Parameter Display	Parameter Name	Contents	UM	Default Value UM	Min Value DEC	Max Value DEC	Min Value UM	Max Value UM	Par. Type
G_A2	G_A2	Analog Output 2 Scaling	V	1000	0	3000	0	3000	R/W

- **Full scale of Analog Output 3 (RMS Current):** This parameter is used to adjust the full scale value of the analog output.

Parameter Display	Parameter Name	Contents	UM	Default Value UM	Min Value DEC	Max Value DEC	Min Value UM	Max Value UM	Par. Type
G_A3	G_A3	Analog Output 3 Scaling	A	1000	0	3000	0	3000	R/W

- **Full scale of Analog Output 4 (Feed-Back Output):** This parameter is used to adjust the full scale value of the analog output.

Parameter Display	Parameter Name	Contents	UM	Default Value UM	Min Value DEC	Max Value DEC	Min Value UM	Max Value UM	Par. Type
G_A4	G_A4	Analog Output 4 Scaling	Hz	1000	0	3000	0	3000	R/W

- **Digital output configuration 2 (terminal 12):** This parameter selects the function of the digital output.

Parameter Display	Parameter Name	Contents	UM	Default Value UM	Min Value DEC	Max Value DEC	Min Value UM	Max Value UM	Par. Type
do_2	do_2	Digital output 2 configuration	ALM	Sw	1	0	3	0	R/W

Sample Values and Note	
Thyristor Failure	00
Heater Break Alarm (HB)	01
Unbalanced Load	02
Current limit active	03

- **Digital output configuration 3 (terminal 13):** This parameter selects the function of the digital output.

Parameter Display	Parameter Name	Contents	UM	Default Value UM	Min Value DEC	Max Value DEC	Min Value UM	Max Value UM	Par. Type
do_3	do_3	Digital output 3 configuration	ALM	0	0	3	0	3	R/W

Sample Values and Note	
Thyristor Failure	00
Heater Break Alarm (HB)	01
Unbalanced Load	02
Low Voltage	03

- **Baud Rate:** This parameter selects the Baud rate on the serial port.

Parameter Display	Parameter Name	Contents	UM	Default Value UM	Min Value DEC	Max Value DEC	Min Value UM	Max Value UM	Par. Type
bAud	bAud	Baud Rate on serial port	Sw	2	0	2	0	2	R/W

Sample Values and Note
4800 = 00
9600 = 01
19200 = 02

- **Address number:** This parameter selects the Address on the serial port for the thyristor unit.

Parameter Display	Parameter Name	Contents	UM	Default Value UM	Min Value DEC	Max Value DEC	Min Value UM	Max Value UM	Par. Type
Addr	Addr	Address number	Hd	1	1	127	1	127	R/W

10.4 Setup Menu

- **Firing mode Selection:** This parameter selects the Firing Type.

Parameter Display	Parameter Name	Contents	UM	Default Value UM	Min Value DEC	Max Value DEC	Min Value UM	Max Value UM	Par. Type
Fir	Fir	Firing mode Selection	Sw	1*	0	2	0	2	R/W

* if not specified in the Order Code

Sample Values and Note	
Burst Firing	= 00
Phase Angle	= 01
Delay Triggering + Burst Firing	= 02

- **HB sensitivity:**

This parameter defines the threshold of current that activates the HB alarm
This value is in percentage respect the nominal load value.

Parameter Display	Parameter Name	Contents	UM	Default Value UM	Min Value DEC	Max Value DEC	Min Value UM	Max Value UM	Par. Type
Hb_S	Hb_S	HB sensitivity	%	100,0	0	4095	0	160,0	R/W

Sample Values and Note

Nominal Current 100A P066 Hb_S =20. This means that the Heather Break Alarm became active when the current goes below 80A.

- **Feed-back selection:** This parameter selects the Feed-back type.

Parameter Display	Parameter Name	Contents	UM	Default Value UM	Min Value DEC	Max Value DEC	Min Value UM	Max Value UM	Par. Type
FEEd	Fir	Feed-back selection	Sw	1*	0	3	0	3	R/W

* if not specified in the Order Code

Sample Values and Note	
Current feed-back (rms value)	= 00
Voltage feed-back (rms value)	= 01
Power feed-back VxI	= 02
External feed-back	= 03

- **Burst Firing Setting:**

It defines the number of voltage cycles in ON condition at 50% of power demand.

Parameter Display	Parameter Name	Contents	UM	Default Value UM	Min Value DEC	Max Value DEC	Min Value UM	Max Value UM	Par. Type
bF_n	bF_n	Burst Firing Setting	Cycle	8 *	1	255	1	255	R/W

* if not specified in the Order Code

- **Ramp setting in Burst Firing:** In Burst Firing is possible to have a soft start ramp.

With this parameter you can define how much cycles are necessary to reach the complete wave form.
You must set a value between 0 and the number of cycles setted in the parameter P083 bF_n . If you set 0 value the ramp is disabled

Parameter Display	Parameter Name	Contents	UM	Default Value UM	Min Value DEC	Max Value DEC	Min Value UM	Max Value UM	Par. Type
bF_r	bF_r	Ramp setting in Burst Firing	Cycle	0 / 4 With S+BF	0	100	0	100	R/W

- **Burst Firing Setting:** This parameter set firing delay in °.

Parameter Display	Parameter Name	Contents	UM	Default Value UM	Min Value DEC	Max Value DEC	Min Value UM	Max Value UM	Par. Type
dt	dt	Delay Triggering	°	80	0	100	0	100	R/W

- **Analog / Digital current limit selection:** This parameter determines the use of the analog or digital Current Limit

Parameter Display	Parameter Name	Contents	UM	Default Value UM	Min Value DEC	Max Value DEC	Min Value UM	Max Value UM	Par. Type
CL_i	CL_i	Analog / Digital current limit selection	Sw	1	0	1	0	1	R/W

Sample Values and Note	
Analog, Current Limit from analog input (terminals 21-22)	= 00
Digital, Current Limit from parameter CL	= 01

- **Internal current limit value:** This parameter contains the digital Current Limit value, active with CL_i = 1

Parameter Display	Parameter Name	Contents	UM	Default Value UM	Min Value DEC	Max Value DEC	Min Value UM	Max Value UM	Par. Type
CL	CL	Internal current limit value	%	100,0	0	4095	0	100,0	R/W

- **Digital input configuration (terminal 8):** This parameter selects the function of digital input.

Parameter Display	Parameter Name	Contents	UM	Default Value UM	Min Value DEC	Max Value DEC	Min Value UM	Max Value UM	Par. Type
LoAd	Load	Define the load type connection	Sw	0 *	0	3	0	3	R/W

* if not specified in the Order Code

Sample Values and Note	
Star	00
Star + N	01
Delta	02
Open Delta	03

11 Firing type

Choose an correct firing type allows to optimize the thyristor unit for the installed load.
The firing type has already configured in line with customer requirements that are defined in the Order Code. The Order Code is written on the identification label.
However, if you wish to change the firing type you can use the software configurator or the Control Panel (see par. 10).

Caution: *this procedure must be performed only by qualified persons.*

11.1 Single Cycle (SC)

Single Cycle it's the faster zero crossing switching method in relationship of the power demand from a temperature regulator or from an external signal.
With input signal at 25% the output is one cycle ON and three cycles OFF
With input signal at 50% the output is one cycle ON and one cycle OFF
With input signal at 75% the output is three cycles ON and one cycle OFF
With input signal at 76% the output is the same of 75% but for each ON cycle the microprocessor divides 76/75, and when the sum of rests is one, the unit does one more cycle ON. For this firing is necessary to have analog input.
The Single Cycle is used to control the loads with low inertia or for infrared lamps to short wave.
set Single Cycle P083 (H53) bF_n parameter value must be equal to **1**

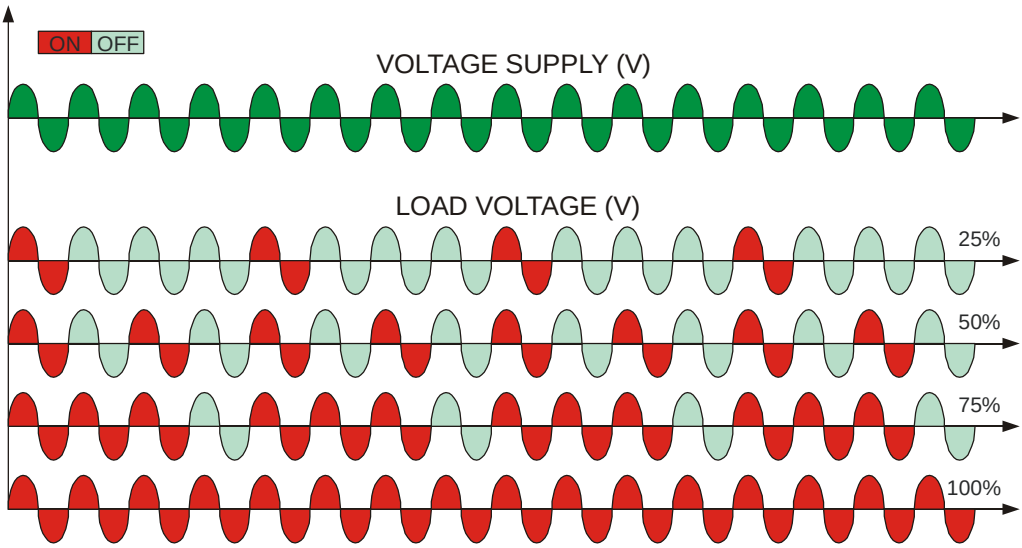

11.1.1 Suggested recipe for Single Cycle

The firing type has already configured in line with customer requirements that are defined in the Order Code. The Order Code is written on the identification label.
However, if you wish to change the firing type you can use the software configurator or the Control Panel (see par. 10).

Caution: *this procedure must be performed only by qualified persons.*

OPERATOR MENU					
Parameter	**Name**	**Value**	**Description**	**UM**	**Mode**
P003 (H03)	L--r	0	Setpoint selection Analog/Digital		R/W
P004 (H04)	L_SP		Digital Setpoint value	%	R/W
P019 (H13)	OutM	100	Maximum Output	%	R/W
P024 (H18)	rP_u	0	Setpoint Ramp Up	Sec	R/W
P025 (H19)	rP_d	0	Setpoint Ramp Down	Sec	R/W
P116 (H74)	U_OP	V Load	Operative load voltage	V	R/W
P119 (H77)	A_Lo	I Load	Load nominal current	A	R/W

SETUP MENU					
Parameter	**Name**	**Value**	**Description**	**UM**	**Mode**
P023 (H17)	F ir	0	Firing Type		R/W
P066 (H42)	Hb_S	20	HB sensitivity	%	R/W
P070 (H46)	FEEd	1	Feed back selection		R/W
P083 (H53)	bF_n	1	Burst Firing Cycles (Not used in Phase Angle)	Cycles	R/W
P084 (H54)	bF_r	0	Ramp Cycles of Burst (Not used in Phase Angle)	Cycles	R/W
P085 (H55)	dt	0	Delay triggering	°	R/W
P090 (H5A)	CL_ ı	1	Limit current Analog/Digital		R/W
P091 (H5B)	CL	0÷100,0☐	Digital Limit current value	%	R/W
P098 (H62)	LoAd	0÷3	Define the load type connection: 0=star 1=star+N 2=delta 3=open delta		R/W

	= modification is not necessary
	= modification is necessary

☐ If the current limit is not used set this value to 100,0%

11.2 Burst Firing (BF)

The Burst Firing is similar to the Single Cycle, but consecutive cycles ON are selectable between 2 and 255, with input signal equal at 50%.
Burst Firing is a method zero crossing that it reduces the electromagnetic interferences because the thyristor switches at zero voltage crossing.
The example show the Burst Firing with Burst cycles: P083 bF_n =4

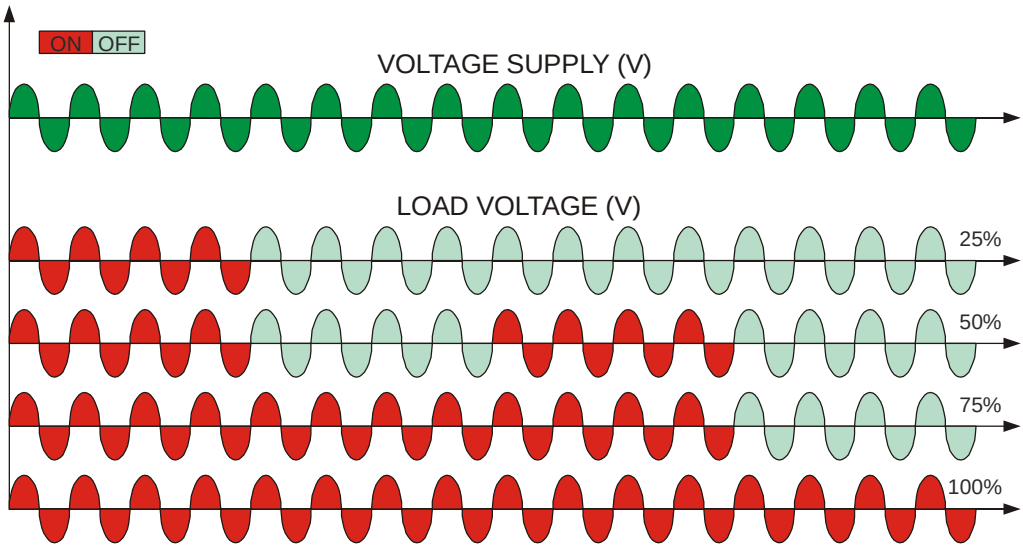

11.2.1 Soft Start with Burst Firing (S+BF)

This is an additional function to the Burst Firing. The unit start in phase angle mode with a ramp starting from zero up to the full tension in the cycles number set in the parameter P084 bF_r.
When the ramp is over, the thyristor unit will stay in conduction at full voltage up to the end of cycles of burst. The S+BF firing is used to control small inductive loads to avoid inrush surge current and to reduce the electromagnetic interferences.
The example show the firing with Burst cycles: P083 bF_n =4 and ramp cycles: P084 bF_r =3

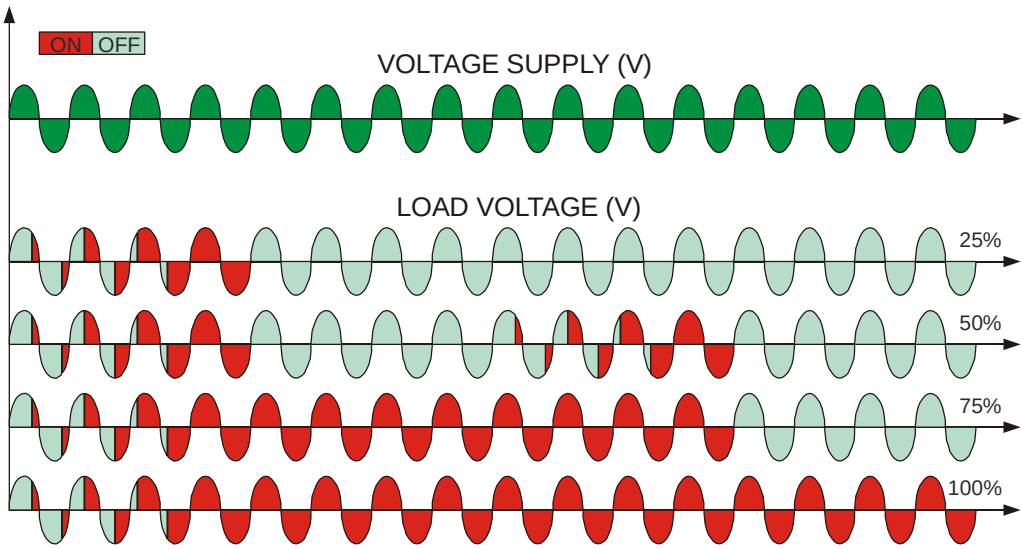

11.2.2 Suggested recipe for Burst Firing

The firing type has already configured in line with customer requirements that are defined in the Order Code. The Order Code is written on the identification label.
However, if you wish to change the firing type you can use the software configurator or the Control Panel (see par. 10).

Caution: *this procedure must be performed only by qualified persons.*

OPERATOR MENU					
Parameter	**Name**	**Value**	**Description**	**UM**	**Mode**
P003 (H03)	L--r	0	Setpoint selection Analog/Digital		R/W
P004 (H04)	L_SP		Digital Setpoint value	%	R/W
P019 (H13)	OutM	100	Maximum Output	%	R/W
P024 (H18)	rP_u	0	Setpoint Ramp Up	Sec	R/W
P025 (H19)	rP_d	0	Setpoint Ramp Down	Sec	R/W
P116 (H74)	U_OP	V Load	Operative load voltage	V	R/W
P119 (H77)	A_Lo	I Load	Load nominal current	A	R/W

SETUP MENU					
Parameter	**Name**	**Value**	**Description**	**UM**	**Mode**
P023 (H17)	F ir	0	Firing Type		R/W
P066 (H42)	Hb_S	20	HB sensitivity	%	R/W
P070 (H46)	FEEd	1	Feed back selection		R/W
P083 (H53)	bF_n	8	Burst Firing Cycles (Not used in Phase Angle)	Cycles	R/W
P084 (H54)	bF_r	<P083 bF_n ²	Ramp Cycles of Burst (Not used in Phase Angle)	Cycles	R/W
P085 (H55)	dt	0	Delay triggering	°	R/W
P090 (H5A)	CL_ı	1	Limit current Analog/Digital		R/W
P091 (H5B)	CL	0÷100,0☐	Digital Limit current value	%	R/W
P098 (H62)	LoAd	0÷3	Define the load type connection: 0=star 1=star+N 2=delta 3=open delta		R/W

	= modification is not necessary
	= modification is necessary

☐ If the current limit is not used set this value to 100,0%.
² If don't use the ramp soft start (S+BF) set this value to 0.

11.3 Phase Angle (PA)

The Phase Angle firing allow the control of the power on the load, for this firing the thyristor can be in conduction only for a part of the voltage cycle.
This part of the voltage cycle is adjustable in function of the input signal from 0 at 100%.
The PA firing is normally used for control the inductive loads, and is also possible control a primary of transformer coupled with the cold resistances like: Superkanthal, Molybdenum, Platinum, Tungsten or Quartz Lamp. The only disadvantage with phase angle is the possible generation of interferences that however can be reduced with opportune filters.

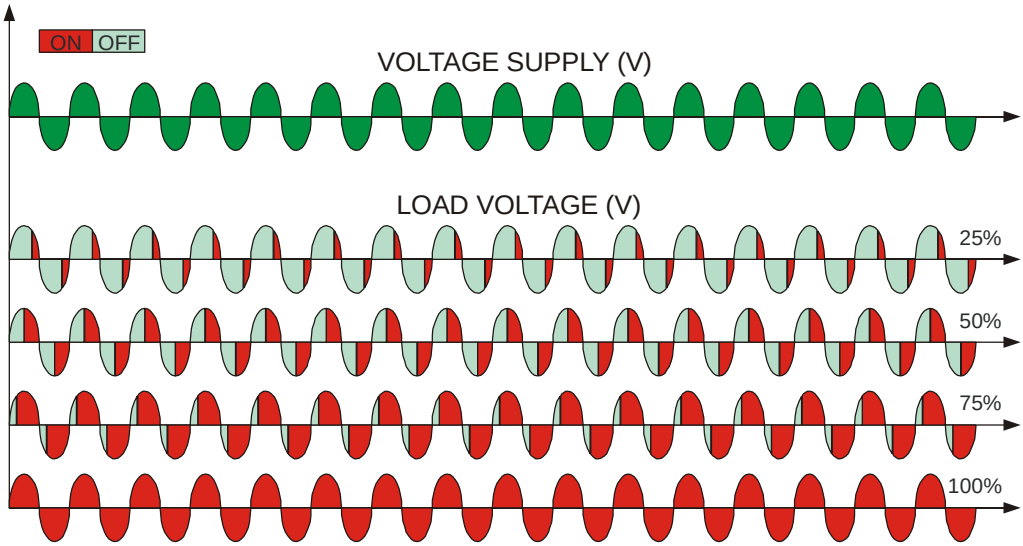

11.3.1 Soft Start with Phase Angle (S+PA)

This is an additional function to the Phase Angle. The firing angle of the thyristor increase or decrease up to the final setpoint value.
The Soft start ramp is an important feature to reduce the inrush current with transformers during the during the cycle of magnetization or with cold resistance that are near to the short circuit when they are supplied.
Setpoint Ramp Up : P024 rP_u
Setpoint Ramp Down: P025 rP_d

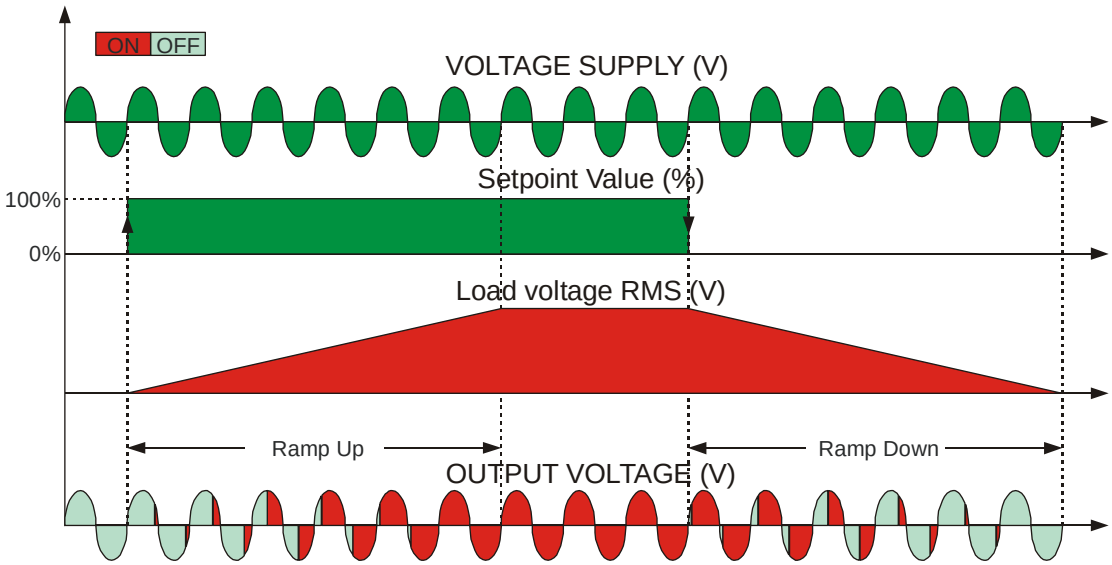

11.3.2 Suggested recipe for Phase Angle

The firing type has already configured in line with customer requirements that are defined in the Order Code. The Order Code is written on the identification label.
However, if you wish to change the firing type you can use the software configurator or the Control Panel (see par. 10).

Caution: *this procedure must be performed only by qualified persons.*

OPERATOR MENU					
Parameter	**Name**	**Value**	**Description**	**UM**	**Mode**
P003 (H03)	L--r	0	Setpoint selection Analog/Digital		R/W
P004 (H04)	L_SP		Digital Setpoint value	%	R/W
P019 (H13)	OutM	100	Maximum Output	%	R/W
P024 (H18)	rP_u	0÷1000²	Setpoint Ramp Up	Sec	R/W
P025 (H19)	rP_d	0÷1000²	Setpoint Ramp Down	Sec	R/W
P116 (H74)	U_OP	V Load	Operative load voltage	V	R/W
P119 (H77)	A_Lo	I Load	Load nominal current	A	R/W

SETUP MENU					
Parameter	**Name**	**Value**	**Description**	**UM**	**Mode**
P023 (H17)	F ir	1	Firing Type		R/W
P066 (H42)	Hb_S	20	HB sensitivity	%	R/W
P070 (H46)	FEEd	1	Feed back selection		R/W
P083 (H53)	bF_n		Burst Firing Cycles (Not used in Phase Angle)	Cycles	R/W
P084 (H54)	bF_r		Ramp Cycles of Burst (Not used in Phase Angle)	Cycles	R/W
P085 (H55)	dt	0	Delay triggering	°	R/W
P090 (H5A)	CL_ı	1	Limit current Analog/Digital		R/W
P091 (H5B)	CL	0÷100,0☐	Digital Limit current value	%	R/W
P098 (H62)	LoAd	0÷3	Define the load type connection: 0=star 1=star+N 2=delta 3=open delta		R/W

	= modification is not necessary
	= modification is necessary

☐ If the current limit is not used set this value to 100,0%.
² If don't use the ramp soft start (S+PA) set this value to 0.

11.4 Delay Triggering (DT)

The Delay Triggering firing is used the control a primary of transformer coupled with the normal resistances on the secondary (N.B. don't connect cold resistances on the secondary like: Superkanthal, Molybdenum, Platinum, Tungsten, Quartz Lamp).
For an inductive load (ex transformer), switching the thyristors at zero crossing can generates transient over currents that can blow the fuses, to avoid this problem you must use the Delay Triggering. This firing delay the first half cycle of Burst for an angle from 0 to 100° relative to the zero, besides all the first burst start with soft start ramp to reduce the inrush current during the cycle of magnetization.

Without Delay Triggering

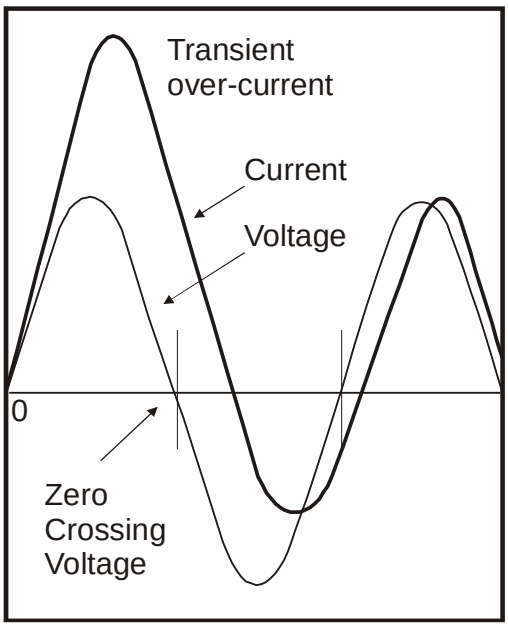

With Delay Triggering

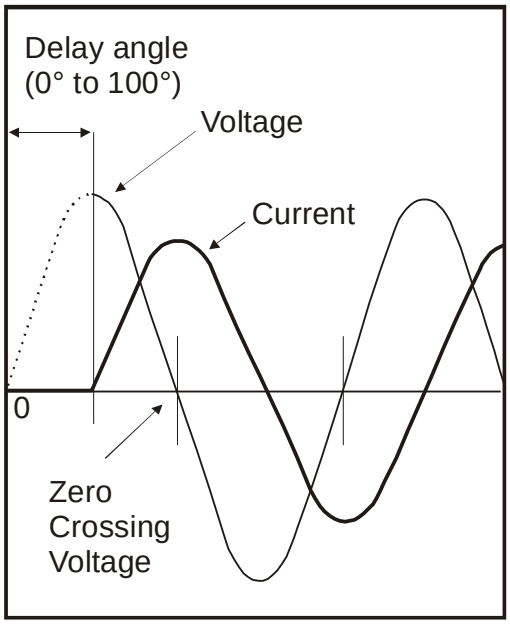

For understand the Delay Triggering firing, we have represented the waves generate by vectors that rotates in counterclockwise:

Without Delay Triggering

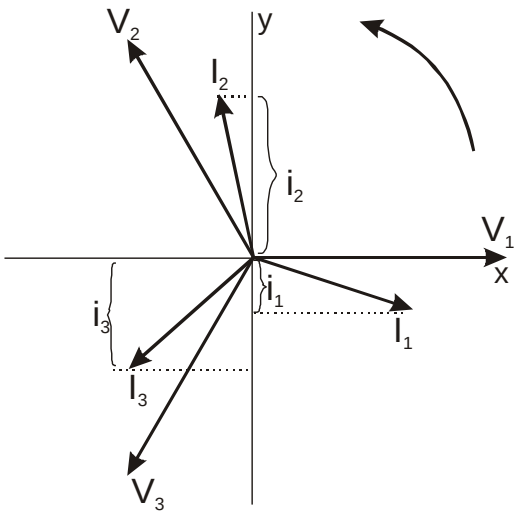

With Delay Triggering

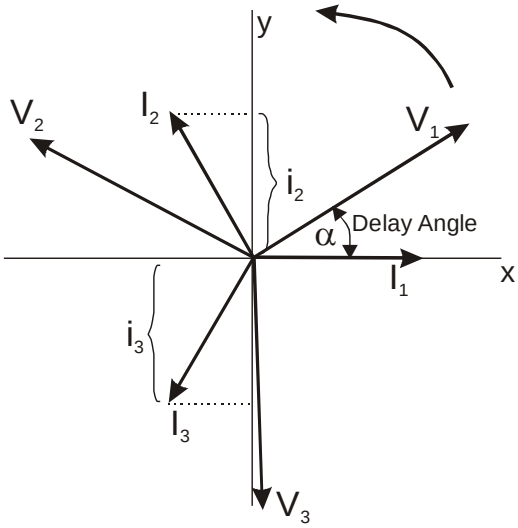

Without delay at zero crossing when V1 is to zero (projected on the X axis) the unit switch On.
In this case the instantaneous value of the currents are i1, i2 and i3 and this condition, for the curve of magnetization, could generate transient over currents that can blow the fuses.
With Delay Triggering the firing of the thyristor are triggered with a delay until the instantaneous value of the curret i1=0, i2 positive and i3 negative like represented.
In this case the risk of transient over currents is reduced and the fuses don't blow.
The angle alpha is the delay to have i1=0 and this angle depends on the power factor.
The delay angle suggest for most applications is 80°

11.4.1 Suggested recipe for Delay Triggering

The firing type has already configured in line with customer requirements that are defined in the Order Code. The Order Code is written on the identification label.
However, if you wish to change the firing type you can use the software configurator or the Control Panel (see par. 10).

Caution: *this procedure must be performed only by qualified persons.*

OPERATOR MENU					
Parameter	**Name**	**Value**	**Description**	**UM**	**Mode**
P003 (H03)	L--r	0	Setpoint selection Analog/Digital		R/W
P004 (H04)	L_SP		Digital Setpoint value	%	R/W
P019 (H13)	OutM	100	Maximum Output	%	R/W
P024 (H18)	rP_u	0÷1000²	Setpoint Ramp Up	Sec	R/W
P025 (H19)	rP_d	0÷1000²	Setpoint Ramp Down	Sec	R/W
P116 (H74)	U_OP	V Load	Operative load voltage	V	R/W
P119 (H77)	A_Lo	I Load	Load nominal current	A	R/W

SETUP MENU					
Parameter	**Name**	**Value**	**Description**	**UM**	**Mode**
P023 (H17)	F ir	2	Firing Type		R/W
P066 (H42)	Hb_S	20	HB sensitivity	%	R/W
P070 (H46)	FEEd	1	Feed back selection		R/W
P083 (H53)	bF_n	8	Burst Firing Cycles (Not used in Phase Angle)	Cycles	R/W
P084 (H54)	bF_r	0	Ramp Cycles of Burst (Not used in Phase Angle)	Cycles	R/W
P085 (H55)	dt	0÷100³	Delay triggering	°	R/W
P090 (H5A)	CL_ı	1	Limit current Analog/Digital		R/W
P091 (H5B)	CL	0÷100,0☐	Digital Limit current value	%	R/W
P098 (H62)	LoAd	0÷3	Define the load type connection: 0=star 1=star+N 2=delta 3=open delta		R/W

	= modification is not necessary
	= modification is necessary

☐ If the current limit is not used set this value to 100,0%.
² If don't use the setpoint ramp set this value to 0.
³ The delay angle suggest for most applications is 80°

11.5 Action of the Limit Current

The Current Limit is available for each firing type.
It control the firing angle of the thyristor to maintain the three RMS current under the set value.
When the current exceeds this value, the voltage is decreased up to reach the current limit set.

I Load <= I Limit Set

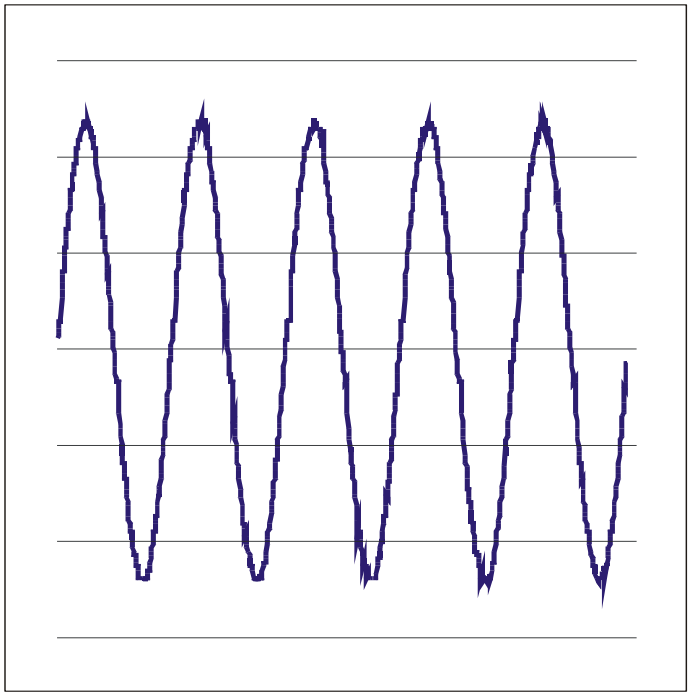

I Load > I Limit Set

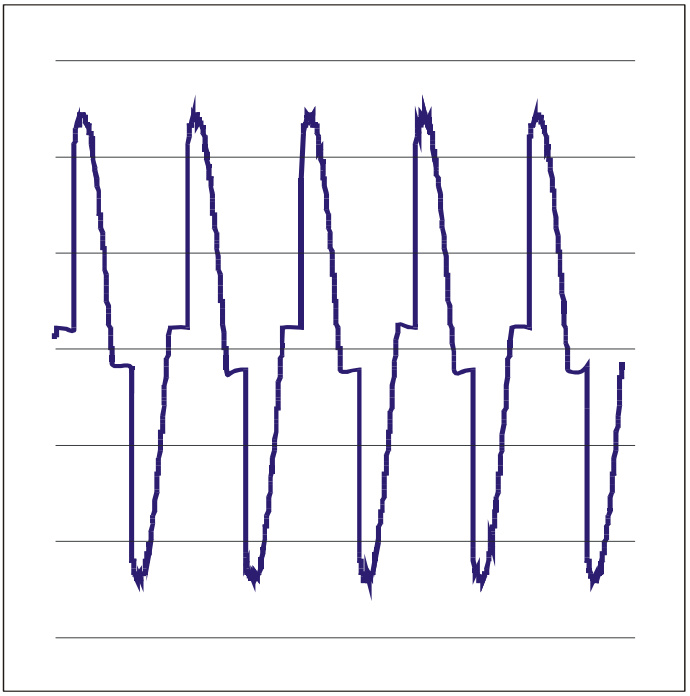

11.5.1 Current Limit Procedure

The current limit could be set through the analogic input 3: External Current Profiler, or in digital mode through the parameter P091 CL .
To select Analog/Digital mode use the parameter P090 CL_ .
To make Current Limit Procedure follow these steps:

Caution: *this procedure must be performed only by qualified persons.*

- Give the power supply and set the current limit to zero:
  - In analog mode, set the analog input 3 at the min value (ex. 0V for 0÷10Vdc or 4 for 4÷20mA)
  - In digital mode, set the parameter P091 CL =0
- Start the MULTIDRIVE thyristor unit (see par. 12.6).
- Set the primary input or the setpoint value at 100% (see par. 12.4).
- Increase the current limit until to reach the desired value.
- Stop the thyristor unit.

The Current Limit Procedure is done.

11.6 Feed-back type

The Feed-back type has already configured in line with customer requirements that are defined in the Order Code. The Order Code is written on the identification label.
However, if you wish to change the Feed-back type you can use the software configurator or the Control Panel (see par. 10).

Caution: *this procedure must be performed only by qualified persons.*

The Feed-back type is defined by the parameter P070 FEEd
If the configurable digital input has set like Feed-Back Selection (see par. 12.6), it's possible to change the select Feed-Back with the Voltage Feed-Back (V) simply activating the input.
The feed-back defines the Control Mode. It's possible to have:

- V=Voltage feed-back.
  The input signal is proportional to the output voltage. This means that input signal becomes a voltage demand. This control mode compensates the voltage fluctuation of the incoming line supply.

- I=Current feed-back.
  The input signal is proportional to the current output. This means that input signal becomes a current demand. This control mode maintain the current also if the load impedance changes.

- W=Power feed-back.
  The input signal is proportional to the power output. This means that input signal becomes a power demand. The power remains constant also if voltage and load impedance change. This control mode is used with silicon carbide elements that change its resistive value with temperature and with age. In addition it compensates the voltage fluctuation of the incoming line supply.

- EX=External feed-back (0÷10Vdc).
  The input signal is proportional to an external signal. This means that input signal becomes a demand to maintain this signal always constant. This control mode is used for example with galvanic systems, where it's necessary to control the current value through the electrodes.

12 Connection description

12.1 Access to the Electronic boards

To have access to the electronic boards the user must removing the unit's cover
(see par.7.1)

Warning: *Before operate, be sure that power and control cables are isolated from voltage sources*

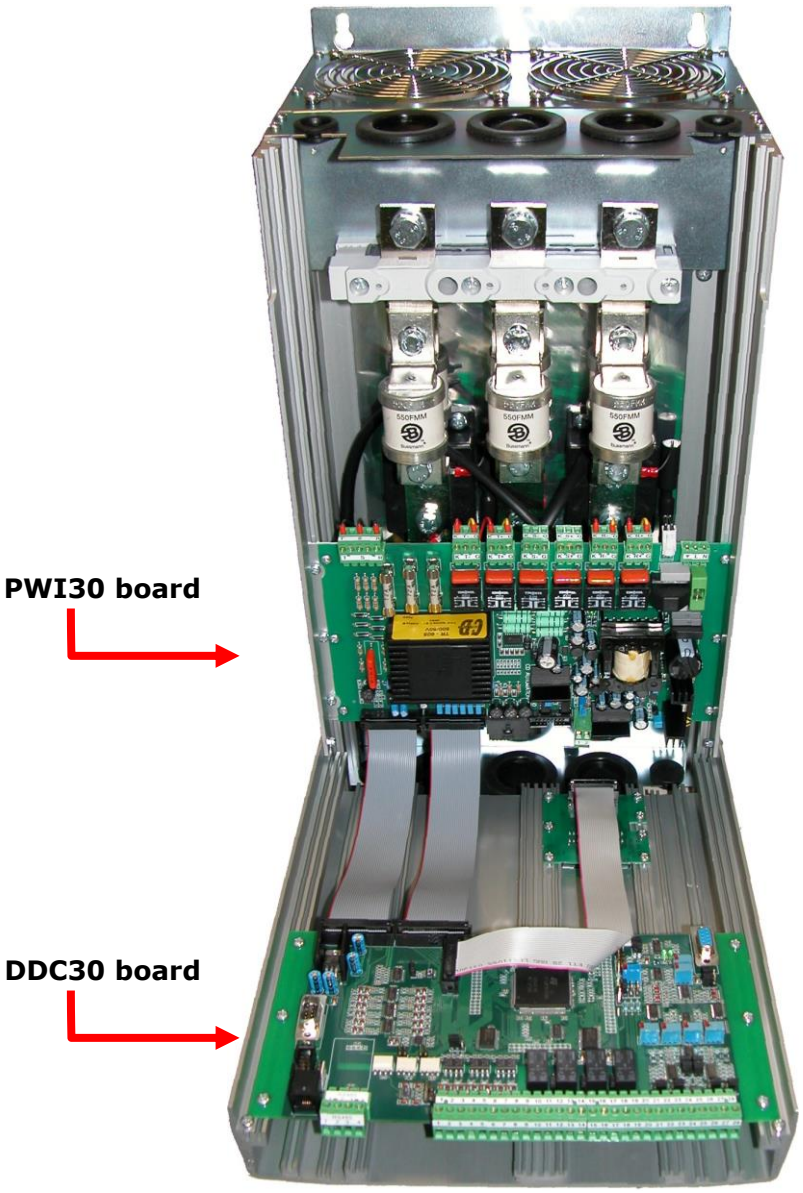

12.2 Supply the Electronic Board PWI30

The MULTIDRIVE thyristor unit, to work, requires a voltage supply for the electronic boards. This voltage is used also to supply the internal fans.
The consumption is 20VA max, at this you must add the consumption of the internal fans (see par. 8.2).
The voltage supply for the electronic boards is configured in line with customer requirements that are defined in the Order Code. The Order Code is written on the identification label.

Warning: *Before connecting or disconnecting the unit check that power and control cables are isolated from voltage sources.*

Terminal	Description
⏚	Earth
L	Voltage Supply for Electronic Boards
N	Voltage Supply for Electronic Boards

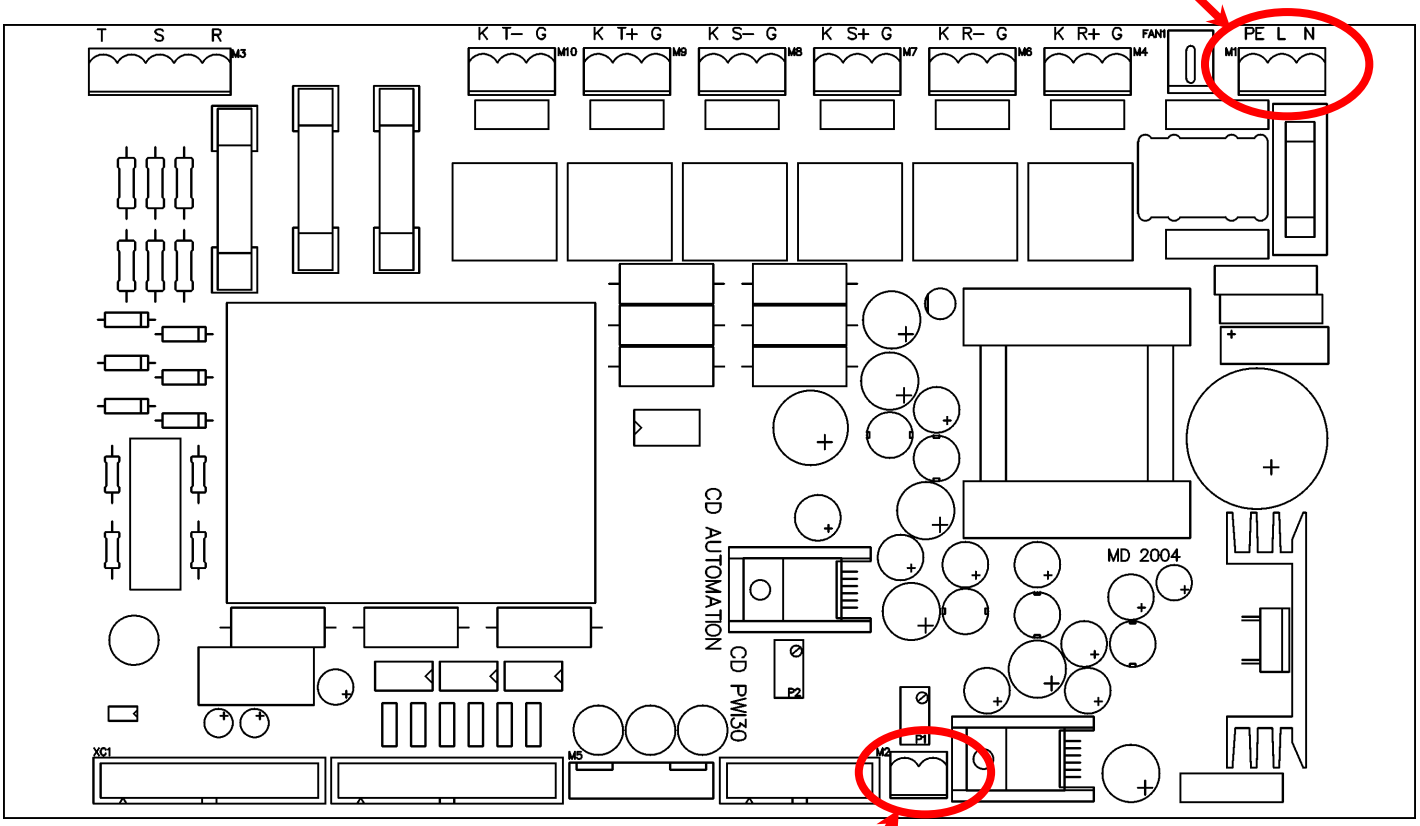

12.3 External Feed-Back

Terminal	Description
1	(+)Input External Feed-Back (0÷10Vdc)
2	(-)Input External Feed-Back (0÷10Vdc)

The MULTIDRIVE thyristor unit has an input for external Feed-Back. It can be activated by the Feed-Back select (see par. 11.6)

12.4 Analog Inputs

The MULTIDRIVE thyristor unit has 3 configurable analog inputs (0÷10V, 4÷20mA, ecc):
The primary input for the analog setpoint, the secondary input for the setpoint correction and the External Current Profiler for the current limit.

12.4.1 Primary Input (Terminals 17 and 18 - see par. 7.4)

The primary input is already configured in line with customer requirements that are defined in the Order Code. The Order Code is written on the identification label.
However, if you wish to change the primary input (ex. from 0÷10V to 4÷20mA) proceed as follows:

Caution: *this procedure must be performed only by qualified persons*

Type	Input features		JP1
0÷10V	Impedance	47KΩ	Open
POT	Impedance	10KΩ min	Open
4÷20mA	Impedance	470Ω	Close

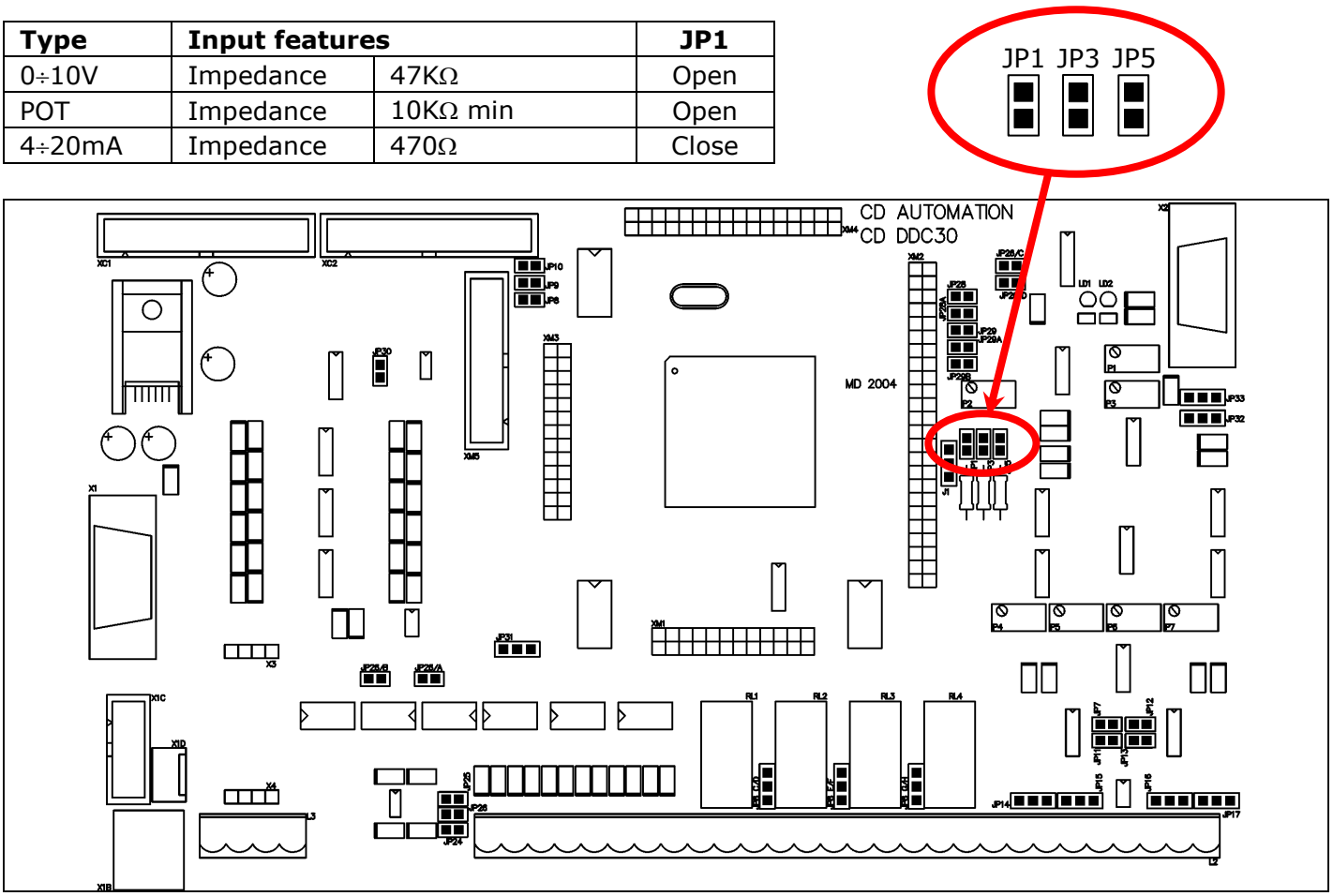

Primary Input calibration procedure

When you change the hardware setting is necessary make the Input calibration procedure.
To make the Input calibration procedure follow these steps:

- Give the power supply.
- With Control Panel go in the Hardware menu (P000 PASS = 5)
- Set the input signal to the min value (ex. 0V for 0÷10V or 4mA for 4÷20mA)
- Set the parameter P057 LiA1 = 1
- Press ENTER key
- Set the input signal to the max value (ex.10V for 0÷10V or 20mA for 4÷20mA)
- Set the parameter P058 HiA1 = 1
- Press ENTER key

The Input calibration procedure is done.

12.4.2 Secondary Input (Terminals 19 and 20 - see par. 7.4)

The secondary input for the setpoint correction is already configured in line with customer requirements that are defined in the Order Code. The Order Code is written on the identification label.
However, if you wish to change the secondary input (ex. from 0÷10V to 4÷20mA) proceed as follows:

Caution: *this procedure must be performed only by qualified persons*

Type	Input features		JP3
0÷10V	Impedance	47KΩ	Open
POT	Impedance	10KΩ min	Open
4÷20mA	Impedance	470Ω	Close

Secondary Input calibration procedure

When you change the hardware setting is necessary make the Input calibration procedure.
To make the Input calibration procedure follow these steps:

- Give the power supply.
- With Control Panel go in the Hardware menu (P000 PASS = 5)
- Set the input signal to the min value (ex. 0V for 0÷10V or 4mA for 4÷20mA)
- Set the parameter P059 L iA2 = 1
- Press ENTER key
- Set the input signal to the max value (ex.10V for 0÷10V or 20mA for 4÷20mA)
- Set the parameter P060 H iA2 = 1
- Press ENTER key

The Input calibration procedure is done.

12.4.3 External Current Profiler (Terminals 21 and 22 - see par. 7.4)

The External Current Profiler input is already configured in line with customer requirements that are defined in the Order Code. The Order Code is written on the identification label.
However, if you wish to change the External Current Profiler input (ex. from 0÷10V to 4÷20mA) proceed as follows:

Caution: *this procedure must be performed only by qualified persons*

Type	Input features		JP5
0÷10V	Impedance	47KΩ	Open
POT	Impedance	10KΩ min	Open
4÷20mA	Impedance	470Ω	Close

External Current Profiler Input calibration procedure

When you change the hardware setting is necessary make the Input calibration procedure.
To make the Input calibration procedure follow these steps:

- Give the power supply.
- With Control Panel go in the Hardware menu (P000 PASS = 5)
- Set the input signal to the min value (ex. 0V for 0÷10V or 4mA for 4÷20mA)
- Set the parameter P061 L iA3 = 1
- Press ENTER key
- Set the input signal to the max value (ex.10V for 0÷10V or 20mA for 4÷20mA)
- Set the parameter P062 H iA3 = 1
- Press ENTER key

The Input calibration procedure is done.

12.5 Analog Outputs

The MULTIDRIVE thyristor unit has 4 configurable analog outputs (0÷10V, 4÷20mA, ecc).
The output 1 is for retransmitting the average power on the three phases, and the others 3 is for the retransmitting the RMS current on the phases L1, L2 and L3

12.5.1 Output 1: Average Power (Terminals 15 and 23 or 16 and 23 - see par. 7.4)

The average power output is already configured in line with customer requirements that are defined in the Order Code. The Order Code is written on the identification label.
However, if you wish to change the average power output (ex. from 0÷10V to 4÷20mA) proceed as follows:

Caution: *this procedure must be performed only by qualified persons*

Type	Output features	P097 o4nA	JP14
0÷10V	20mA Max	0	A-B
0÷20mA	500Ω Max	0	B-C
4÷20mA	500Ω Max	1	B-C

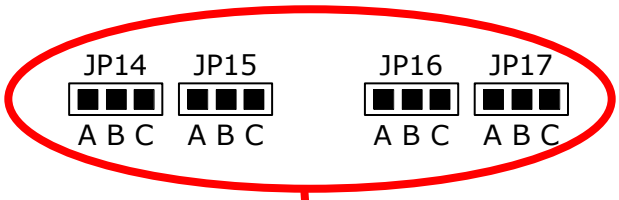

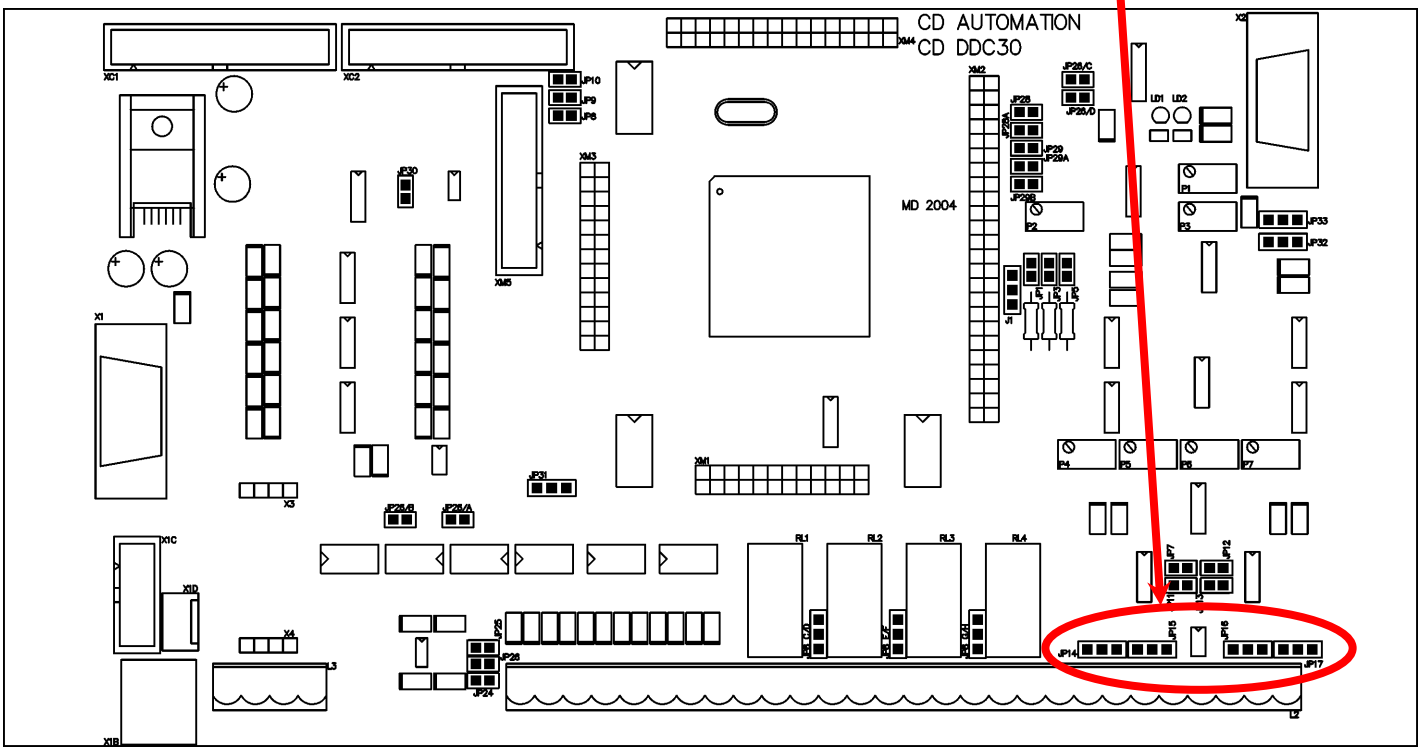

Setting the Output 1 Value
The parameter P104 G_A1 allows to set the full scale value to have the maximum output, for example if you use an indicator with full scale 50Kw set the parameter P104 G_A1 = 50.

12.5.2 Output 2: L1 RMS current (Terminals 15 and 24 or 16 and 24 - see par. 7.4)

The RMS current output is already configured in line with customer requirements that are defined in the Order Code. The Order Code is written on the identification label.
However, if you wish to change the RMS current output (ex. from 0÷10V to 4÷20mA) proceed as follows:

Caution: *this procedure must be performed only by qualified persons*

Type	Output features	P097 oUTA	JP15
0÷10V	20mA Max	0	A-B
0÷20mA	500Ω Max	0	B-C
4÷20mA	500Ω Max	1	B-C

Setting the Output 2 Value:
The parameter P106 G_A2 allows to set the full scale value to have the maximum output, for example if you use an indicator with full scale 50A set the parameter P106 G_A2 = 50.

12.5.3 Output 3: L2 RMS current (Terminals 15 and 25 or 16 and 25 - see par. 7.4)

The RMS current output is already configured in line with customer requirements that are defined in the Order Code. The Order Code is written on the identification label.
However, if you wish to change the RMS current output (ex. from 0÷10V to 4÷20mA) proceed as follows:

Caution: *this procedure must be performed only by qualified persons*

Type	Output features	P097 oUTA	JP16
0÷10V	20mA Max	0	A-B
0÷20mA	500Ω Max	0	B-C
4÷20mA	500Ω Max	1	B-C

Setting the Output 3 Value:
The parameter P108 G_A3 allows to set the full scale value to have the maximum output, for example if you use an indicator with full scale 50A set the parameter P108 G_A3 = 50.

12.5.4 Output 4: L3 RMS current (Terminals 15 and 26 or 16 and 26 - see par. 7.4)

The RMS current output is already configured in line with customer requirements that are defined in the Order Code. The Order Code is written on the identification label.
However, if you wish to change the RMS current output (ex. from 0÷10V to 4÷20mA) proceed as follows:

Caution: *this procedure must be performed only by qualified persons*

Type	Output features	P097 oUTA	JP17
0÷10V	20mA Max	0	A-B
0÷20mA	500Ω Max	0	B-C
4÷20mA	500Ω Max	1	B-C

Setting the Output 4 Value:
The parameter P110 G_A4 allows to set the full scale value to have the maximum output, for example if you use an indicator with full scale 50A set the parameter P110 G_A4 = 50.

12.6 Digital Input

The MULTIDRIVE thyristor unit has 6 digital inputs opto-isolated to 24Vdc.
You can activate the inputs with the internal supply (see par. 7.5) or with an external source for example the PLC.

12.6.1 Reset alarm (Terminal 3 see par. 7.4)

The Reset Alarm is used for restore the unit after an alarm occurs.
Before using this input you must resolve the fault or the alarm status come back.

12.6.2 Start/Stop (Terminal 4 see par. 7.4)

This is the start command of the MULTIDRIVE thyristor unit and active the relative digital output (terminal 9 and 10) connected to the main contactor, if no alarm occurs, the MULTIDRIVE thyristor unit give an output proportional at the input signal.
If you Remove the Start command the MULTIDRIVE thyristor unit will be stopped and the output will return at zero following the ramp. When the ramp is over the contact at the terminals 9 and 10 will be reopened and the main contactor goes down.

<u>If the Enable input is not active, the Start/Stop command have not effect</u>

12.6.3 Enable (Terminale 5 see par. 7.4)

The MULTIDRIVE thyristor unit, to work, must have this digital input active.
When the unit is in Run and you remove the Enable command the unit will be stopped and the output goes at zero without follow the ramp. The contact at the terminals 9 and 10 will be immediately reopened and the main contactor goes down.

12.6.4 External Alarm (Terminal 6 see par. 7.4)

The MULTIDRIVE thyristor unit, to work, must not have this digital input active.
When the unit is in Run and you active the External Alarm, the unit will be stopped and the output goes at zero without follow the ramp. The contact at the terminals 9 and 10 will be immediately reopened and the main contactor goes down. The External Alarm activates also the Critical Alarm digital output.

12.6.5 Calibration (Terminal 7 see par. 7.4)

The Calibration input activates the Calibration procedure that is necessary if you use the Burst Firing (BF) or the Heater break alarm (see par. 9.4).

12.6.6 Configurable Input (Terminal 8 see par. 7.4)

This digital input is configured by the parameter P103 C_d1 and could perform different functions:

- Additional Reset Alarm:
  This function is the same of the Reset Alarm command.
- Setpoint zero:
  This function forces the output at zero maintaining the Run contact closed.
- Feed-Back Selection:
  With this function, when you active the input, the feed-back setted in the parameter P070 FEEd change in Voltage Feed-Back (V).
- Analog/Digital Setpoint:
  With this function, when you active the input, the setpoint reference change from Analog input to Digital value, setted in the parameter P004
- External Alarm:
  With this function the thyristor unit, to work, must not have this digital input active.
  When the unit is in Run and you active the External Alarm, the unit will be stopped and the output goes at zero without follow the ramp. The Run contact at the terminals 13 and 14 will be immediately reopened and the main contactor goes down. The External Alarm activates also the Critical Alarm digital output.

12.7 Digital Output

The MULTIDRIVE thyristor unit has 4 digital output with relay contact (Max 500mA, 125Vac), an output control the main contactor and is a normally open (NO) fixed contact, and the others output gives indications of the alarms state, the contacts can be (NO or NC).

12.7.1 Run Relay (Terminals 9 and 10 see par. 7.4)

This digital output is used to control the main contactor, when the thyristor unit is in run the output is active and the contact is closed.

12.7.2 Critical Alarm (Terminals 11 and 14 see par. 7.4)

This digital output is active when a critical alarm occurs (see par. 9.2).
The standard contact used for this output is normally open (NO), but is possible change the contact type:

Caution: *this procedure must be performed only by qualified persons*

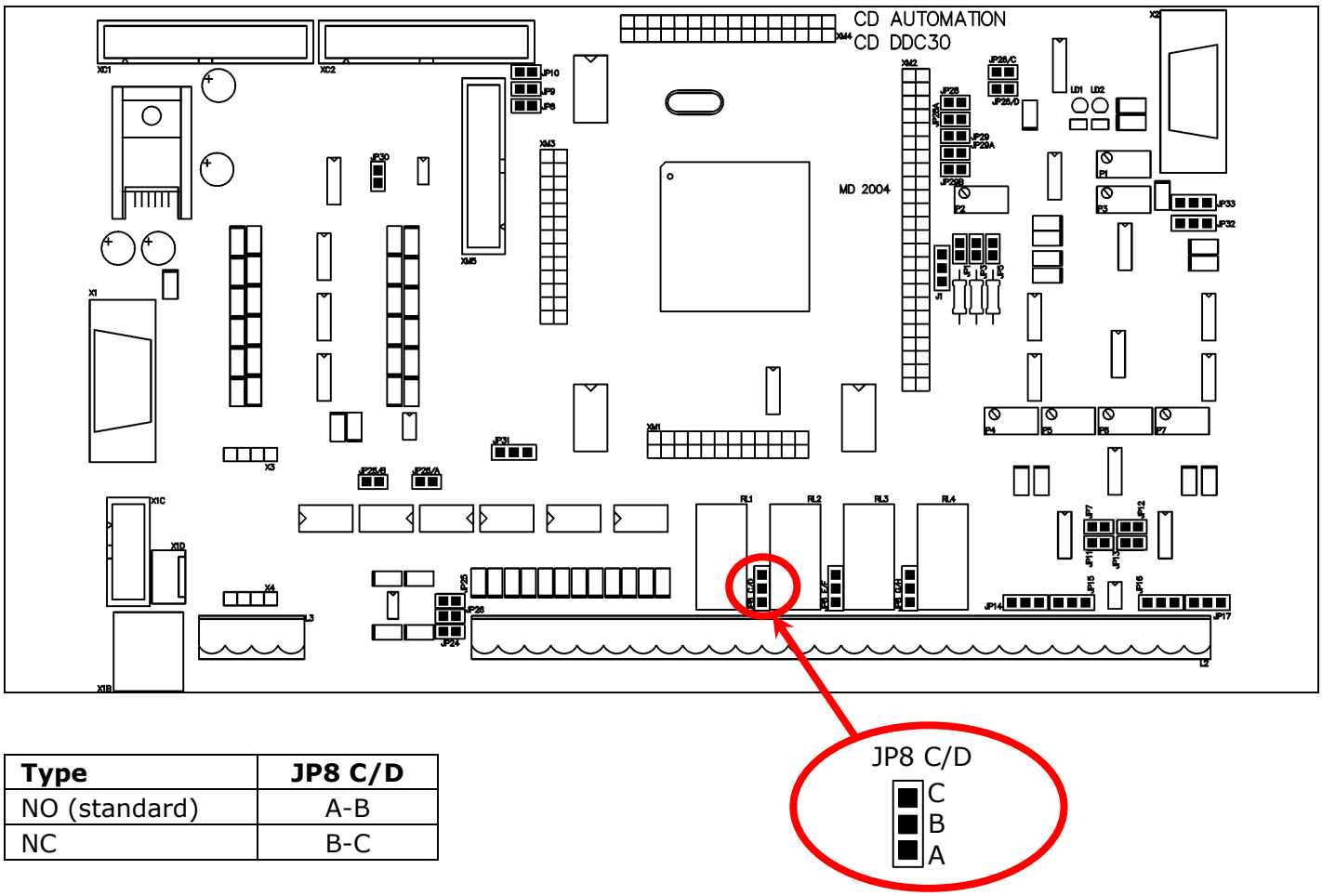

Type	JP8 C/D
NO (standard)	A-B
NC	B-C

12.7.3 Configurable Digital Output 2 (Terminals 12 and 14 see par. 7.4)

This digital output can be configured in order to activate itself after that one of these alarms occors:

- SCR in short circuit
- Unbalanced Load
- Heater Break Alarm (HB)
- Current Limit active

The parameter for configurate the output is the P112 do_2
The standard contact used for this output is normally open (NO), but is possible change the contact type:

Caution: *this procedure must be performed only by qualified persons*

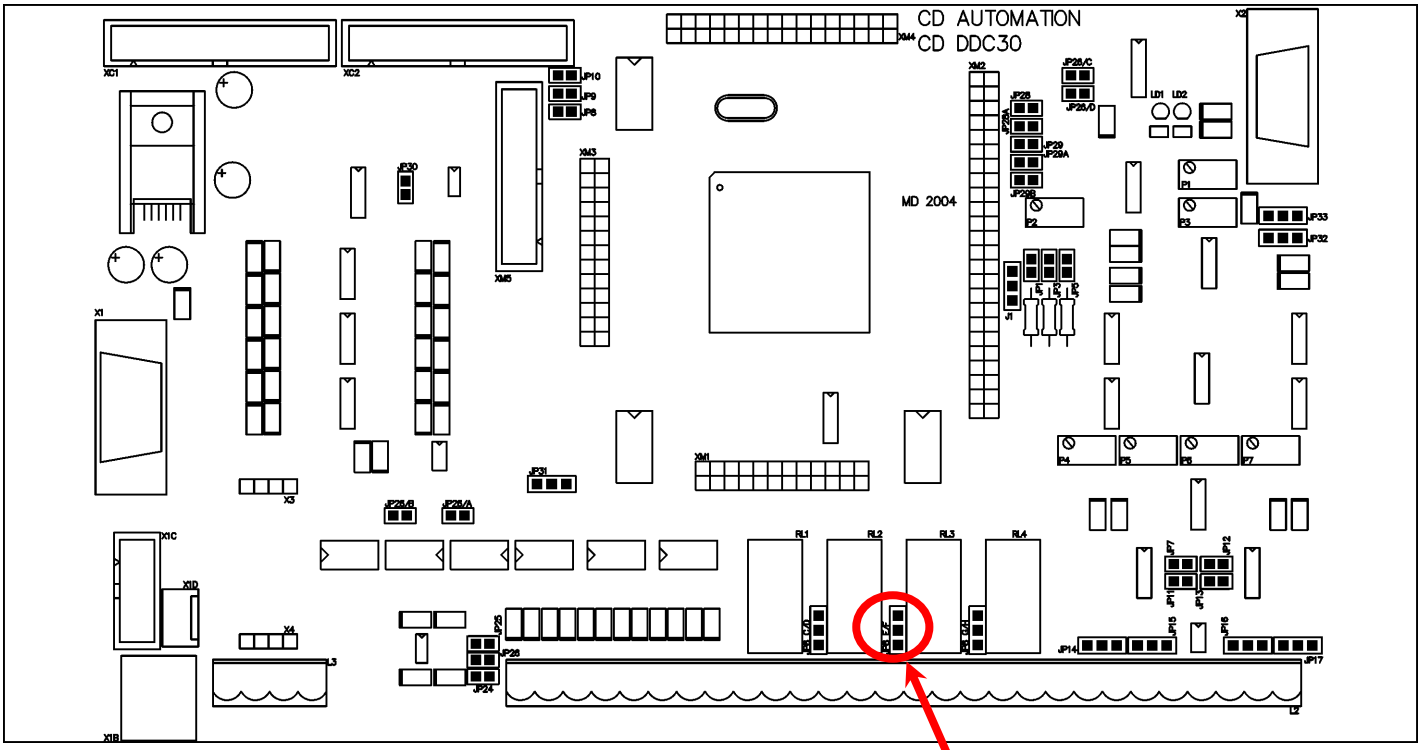

Type	JP8 E/F
NO (standard)	A-B
NC	B-C

12.7.4 Configurable Digital Output 3 (Terminals 13 and 14 see par. 7.4)

This digital output can be configured in order to activate itself after that one of these alarms occors:

- SCR in short circuit
- Unbalanced Load
- Heater Break Alarm (HB)
- Low Voltage

The parameter for configurate the output is the P113 do_3
The standard contact used for this output is normally open (NO), but is possible change the contact type:

Caution: *this procedure must be performed only by qualified persons*

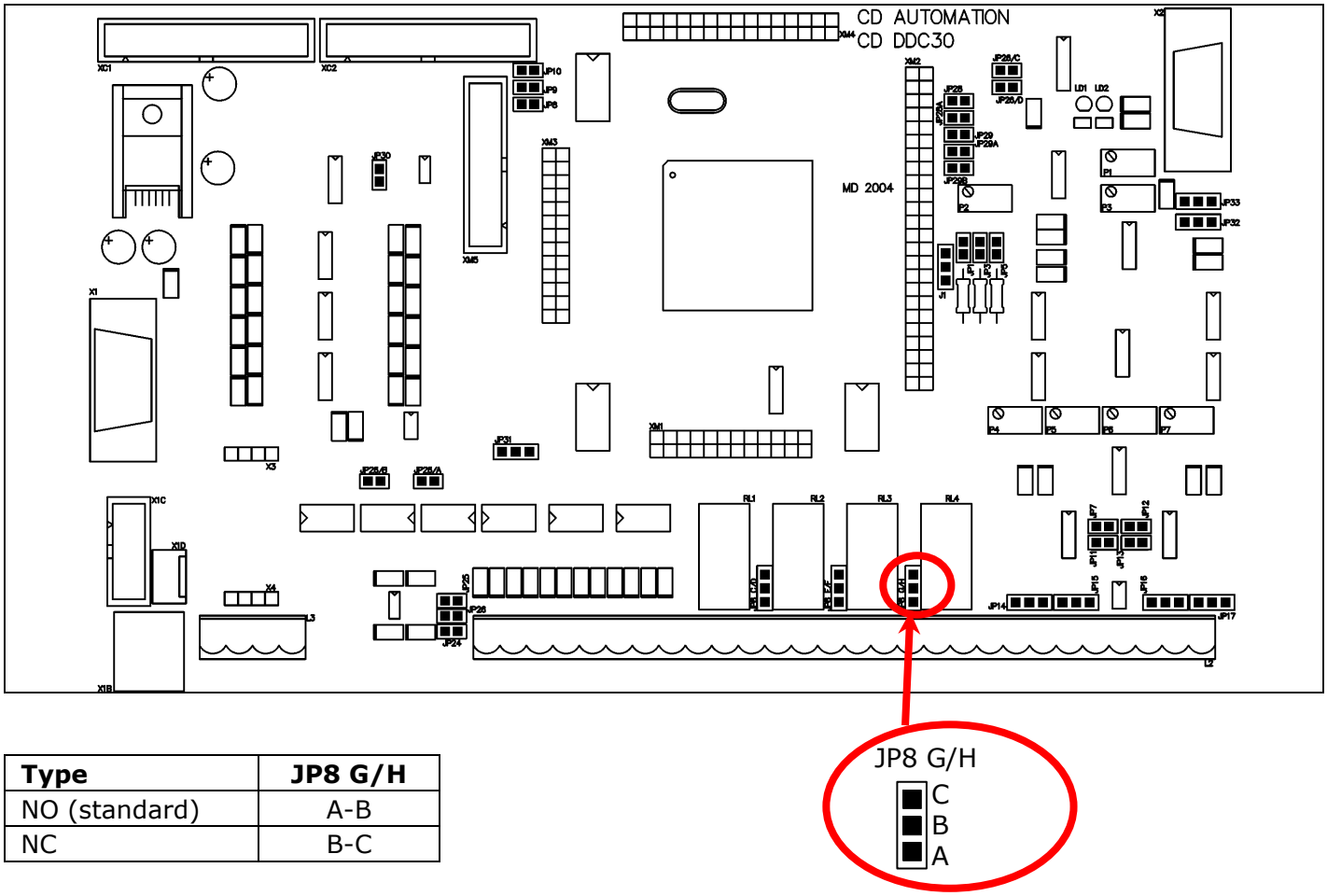

Type	JP8 G/H
NO (standard)	A-B
NC	B-C

12.8 PG Connector

The PG Connector is used to configure the thyristor unit with the configuration software and with the programming cable.
The programming cable is not included.

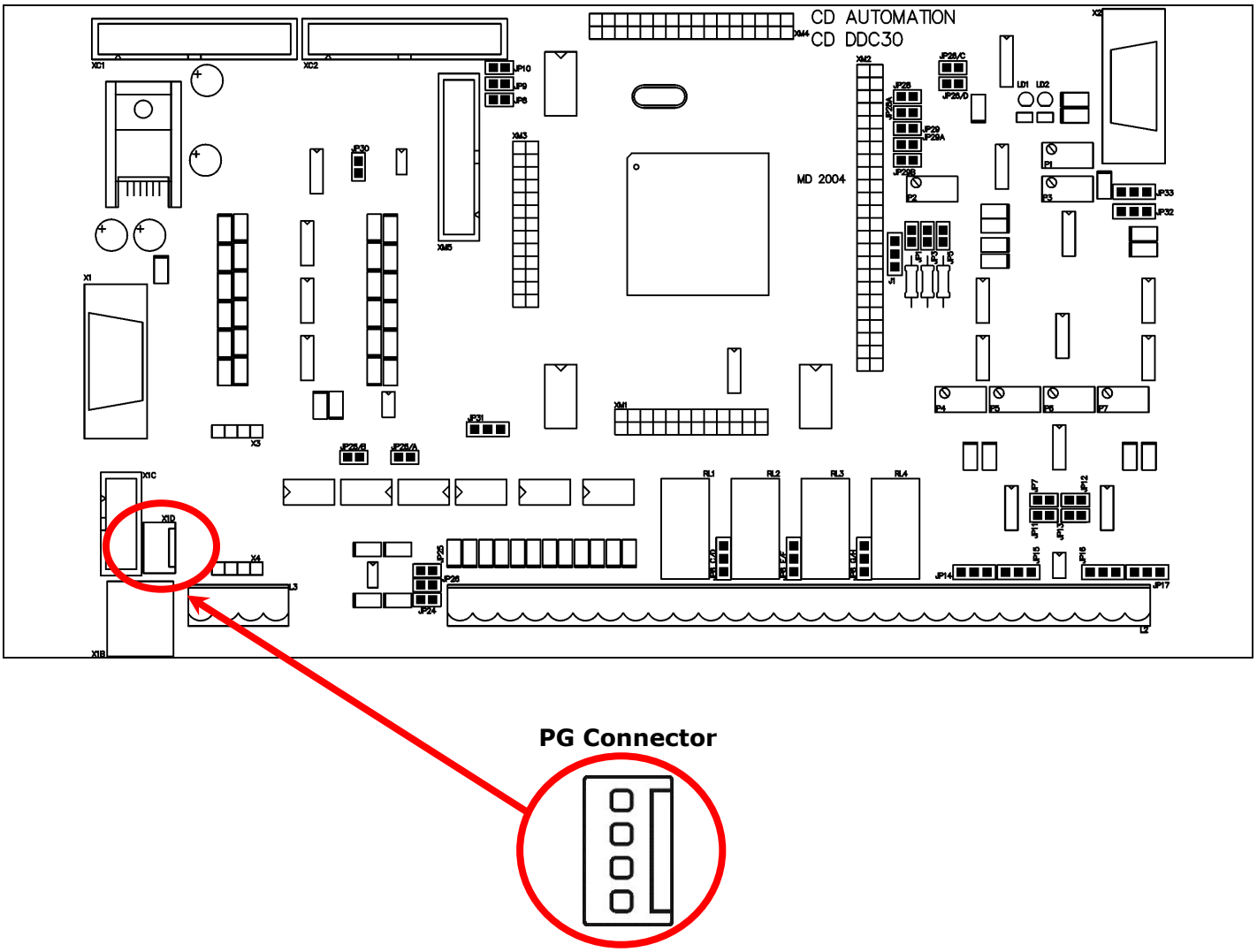

12.9 RS485 Serial Port

The serial communication port RS485 is available on the Command Terminals and on the 9pin DIN male connector.
On this port may be done a network up to 127 MULTIDRIVE.
On the 9pin DIN male connector is also possible connect the CD-EASY (see par. 2.3)

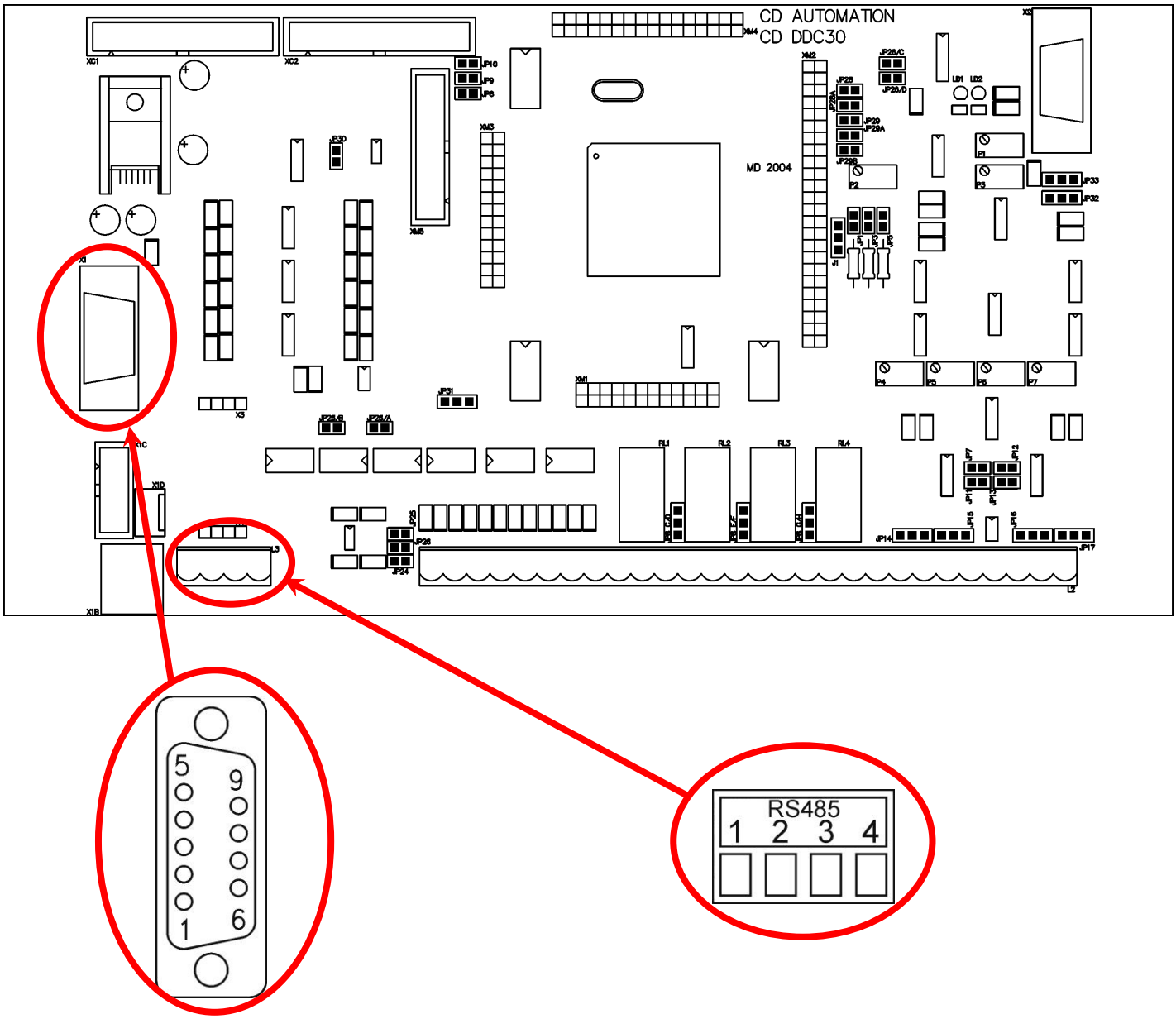

Pin	Description
1	PMS5 (+5V)
2	GND 0V
3	GND 0V
4	Reserved (Rxd0)
5	GND 0V
6	RS485 A
7	RS485 B
8	nc
9	Reserved (Txd0)

Terminal	Description
1	RS485 A
2	RS485 B
3	For internal use
4	For internal use

Internal Fuse

The MULTIDRIVE thyristor unit have internal fuse extrarapid at low I^2t for the thyristor protection of against the short-circuits.
The fuse must have I^2t lower than the thyristor one (I^2t max)

Caution: *USE ONLY EXTRARAPID FUSE WITH APPROPRIATE I^2T*

12.10 Fuse Code

Size	200 kARMS Symmetrical A.I.C.				Qty
	Fuse CODE	Current (A RMS)	I^2T (A^2sec)	Vac	
35A (S13)	20 559 02.160	160	12320	660	3
45A (S13)	20 559 02.160	160	12320	660	3
75A (S13)	20 559 02.160	160	12320	660	3
100A (S13)	20 559 02.160	160	12320	660	3
125A (S13)	20 282 20.180	180	16320	660	3
150A (S13)	20 282 20.250	250	35200	660	3
225A (S13)	20 559 20.315	315	61600	660	3
300A (S14)	FU450FMM	450	84000	660	3
350A (S14)	FU550FMM	550	193500	660	3
400A (S14)	FU550FMM	550	193500	660	3
450A (S14)	FU700FMM	700	378000	660	3
500A (S14)	FU700FMM	700	378000	660	3
600A (S14)	2xFU450FMM	2x450	378000	660	3
850A (S15)	2xFU550FMM	2x550	860000	660	3

Caution: *The Fuses must have I^2t 20% less than thyristor's I^2t.*

Caution: *High speed fuses are used only for the thyristor protection and can not be used to protect the installation.*

Caution: *The warranty of thyristor is null if no proper fuses are used. See tab.*

Warning: *The user installation must be protected by electromagnetic circuit breaker or by fuse isolator.*

13 Maintenance

13.1 Fans

The thyristor unit with forced ventilation uses fans that rotate permanently when the unit is supplied. In case of fan failure, the heat-sink can be reach high temperature. In this case to give protection to thyristor there is a thermal switch properly setted. The function of this switch is to open the input signal until the heat-sink temperature falls below the setted value. This means that also with input signal in ON condition the unit is switched OFF and the system can not work at full power. For this reason is important to control periodically the fans status checking that are rotating.

13.2 Maintenance

For maintain a correct cooling, the consumer must clean the heat-sink and the protective grate of the fans. The frequency of these operations depends on the atmospheric local pollution.
Check also that the screw of the power terminals and earth terminals are shut correctly
(see Diagram of control connection).

13.3 Repairing procedure

- Phone to CD Automation.
- Explain to Service Engineer the problem because sometimes it can be solved with a phone call. If this is not possible, ship the unit to CD Automation or to your distributor.
- Write a fault description and give the name of your personnel to which refers.
- Use a rugged packaging to ship the unit.

13.4 Warranty condition

CD Automation gives a 12 months warranty to its products. The warranty is limited to repairing and parts substitution in our factory and does exclude products not properly used and fuses.
Warranty does not include products with serial numbers deleted. The faulty product should be shipped to CD Automation at customer's cost and our Service will evaluate if product is under warranty terms.
Substituted parts remain of CD Automation property.